DOCUMENT DATA FORM **Your Name: Nick Carl**

Document Title or Description (max. 254 characters): Circle: Same as cover (or fill in below)

Drawing Book 7, chapter 8: Floor truss details

Include work order no. and floor no. if applicable

Roll # DB03	Doc. ID (report #, dwg. #):

Document Date: 1969	Document Author Name:	Author Organization: SHC&R

KEYWORDS – HIGHLIGHT ALL THAT APPLY

Level 1

Bankers Trust	Project 4	WTC 1 - North Tower	Add
Below Grade	Project 5	(WTC 2 - South Tower)	
Concourse	Project 6	WTC 3 - Marriot Hotel	
Electrical Substation	Project 7	WTC 4 - South Plaza Bldg.	
Liberty Plaza	Project 8	WTC 5 - North Plaza Bldg	
PATH Station	WFC 1 - Oppenhiemer Dow	WTC 6 - Customs House	
PATH Terminal	WFC 2 - Tower B	WTC 7	
Project 1	WFC 3 - American Express	WTC Complex	
Project 2	WFC 4 - Tower D	WTC Plaza	
Project 3			

Level 2

Accident analysis & risk	Fire protection	Misc. Performance Problems	(Structural)
Architectural	Fire service	News coverage	Tenant alterations
Data request	Landscaping	Police	Tenant Space
Emergency management	Management	Security	Add
Evacuation	Mech./elec.		

Level 3

1993 explosion	Cranes	Frame	Roof	Weight
A/E fitout	Criteria	Frame analysis	Safety	Weld detail
A-242	Dampers	Frequency	Schedule	Weld size
A-36	Debris	Fuel	Sculpture	Welding
A-497	Deck	Furniture layout	Security system	Wind
Aircraft impact	Deflection	Generators	Shear knuckle	Windows
Air cooled condensers	Demolition	Guidelines	Shear test	Yield strength
Analysis	Design	Gypsum board	Shear Stud	Add
Angles	(Detailing)	Hat truss	Shop drawings	(Drawing books)
Antenna	Doors	Human comfort	Shortening	
Artifacts	Drawings	HVAC	Slab	
Asbestos	Eastern States Steel	Index	Slurry wall	
Base plate	Egress	Inspection	Smoke control	
Beams	Elevator	Insulation	Smoke test	
Bid documents	Elevator Shaft	Job number	Spandrel beam	
Bid Invitation	Emergency communications	Joist	Specifications	
Bow tie	Equipment	L-50	Splices	
Bracing	Erection marks	Lighting	Sprinkler	
Bridging truss	Errors & Omissions	Loads	Stability	
Building code	Escalator	Maintenance	Stairways	
Calculations	Expansion joint	Marking	Standards	
Carpet	Exterior columns	Mesh reinforcement	Steel	
Ceilings	Fabrication	Mill inspection	Steel composition	
Certification	Family member	Model	Stiffness	
Chillers	Field survey	Mullion	Structural review	
Cladding	Fire alarms	Operations	Surveillance	
Collapse	Fireproofing	Paint	Survey	
Columns	Fire spread	Partition layout	Survivor	
Communication systems	Fire testing	Partitions	Tenant list	
Composite truss	Firetower	Photos	Tenant occupancy	
Computer output	Flag Pole	Pipes	Testing	
Computer program	Flammability	Plumbing	Tie	
Concrete	Floor	Prestressing	Tolerances	
Connections	Floor load	Probability, uncertainty	Transfer Girders	
Construction	Floor slab	Quality control	Triad	
Contract	Floor system	Ramp	Truss	
Core beams	(Floor trusses)	Reinforcing (strengthening)	Vestibule	
Core columns	Formwork	Renovation	Vibration	
Corrosion	Foundations	Repair	Walls	
Cracking	Fracture	Research & Development	Water supply	
			Weather	

WTCI-1060-LERA | SKILLING, HELLE, CHRISTIANSEN, ROBERTSON | Structural & Civil Engineers

PROJECT THE WORLD TRADE CENTER | TITLE FLOOR TRUSS DETAILS - INDEX | DATE 3-19-69

REVISIONS

4-1-69

Printed 5-1-69

7-B8-1	INDEX	7-B8-8.11	DETAIL 8.10
7-B8-2	TYPICAL LACING DETAIL	7-B8-8.12	DETAIL 8.11, 8.12
7-B8-3.1	DETAIL 3.1	7-B8-8.13	DETAIL 8.13
7-B8-3.2	DETAIL 3.2, 3.3	7-B8-8.14	DET. 8 SECT. C-G
7-B8-3.3	DETAIL 3.4, 3.5	7-B8-8.15	DET. 8 SECT. H, J
7-B8-3.4	DETAIL 3.6	7-B8-8.16	DETAIL 8.14
7-B8-3.5	DETAIL 3.7	7-B8-8.17	DETAIL 8.15, 8.16
7-B8-3.6	DETAIL 3.8	7-B8-8.18	DETAIL 8.17
7-B8-3.7	DETAIL 3.9	7-B8-8.19	DET. 8 SECT. H-L
7-B8-3.8	DETAIL 3.10, 3.11	7-B8-8.20	DET. 8 SECT. M-N
7-B8-3.9	DETAIL 3.12	7-B8-9.1	DETAIL 9.1
7-B8-3.10	DETAIL 3.13	7-B8-10.1	DETAIL 10.1
7-B8-3.11	DETAIL 3.14	7-B8-10.2	DETAIL 10.2
7-B8-3.12	DETAIL 3.15	7-B8-10.3	DETAIL 10.3
7-B8-3.13	DETAIL 3.16	7-B8-10.4	DETAIL 10.4
7-B8-3.14	DETAIL 3.17	7-B8-10.5	DETAIL 10.5
7-B8-3.15	DETAIL 3.18, 3.19	7-B8-10.6	DETAIL 10.6
7-B8-3.16	DETAIL 3.20	7-B8-10.7	DETAIL 10.7
7-B8-4.1	DETAIL 4.1, 4.2, 4.3	7-B8-10.8	DETAIL 10.8
7-B8-4.2	DETAIL 4.4	7-B8-10.9	DETAIL 10.9
7-B8-4.3	DETAIL 4.5	7-B8-11	NOT USED
7-B8-4.4	DETAIL 4.6	7-B8-12.1	DETAIL 12.1-.5 & .9, .10
7-B8-5.1	DETAIL 5.1	7-B8-12.2	DETAIL 12.1- 12.11
7-B8-5.2	DETAIL 5.2	7-B8-12.3	DETAIL 12.6 & 12.7
7-B8-5.3	DETAIL 5.3	7-B8-12.4	DETAIL 12.8 & 12.11
7-B8-6.1	DETAIL 6.1	7-B8-12.5	DETAIL 12.12
7-B8-6.2	DETAIL 6.2, 6.3		
7-B8-7.1	DETAIL 7.1, 7.3, 7.5		
7-B8-7.2	DETAIL 7.2		
7-B8-7.3	DETAIL 7.4	7-B8-13.1	DETAIL 13.1
7-B8-8.1	DETAIL 8.1	7-B8-13.2	DETAIL 13.2 & 13.4
7-B8-8.2	DETAIL 8.2	7-B8-13.3	DETAIL 13.3
7-B8-8.3	DETAIL 8.3	7-B8-14.1	DETAIL 14.1
7-B8-8.4	DETAIL 8.4	7-B8-15.1	DETAIL 15.1
7-B8-8.5	DETAIL 8.5	7-B8-15.2	DETAIL 15.2
7-B8-8.6	DETAIL 8.6	7-B8-16.1	DETAIL 16.1-16.6
7-B8-8.7	DETAIL 8.7		
7-B8-8.8	DETAIL 8.8		
7-B8-8.9	DETAIL 8.9		
7-B8-8.10	DET. 8 SECT A, B		

LICENSED PROFESSIONAL ENGINEER LESLIE E. ROBERTSON NO. 34360 UNIVERSITY OF THE STATE OF NEW YORK

DESIGNED

DRAWN

REVIEWED

7-B8-1

SKILLING, HELLE, CHRISTIANSEN, ROBERTSON — Structural & Civil Engineers

PROJECT: THE WORLD TRADE CENTER | TITLE: FLOOR TRUSS DETAIL - TYPICAL LACING | DATE: 3-19-69

REVISIONS

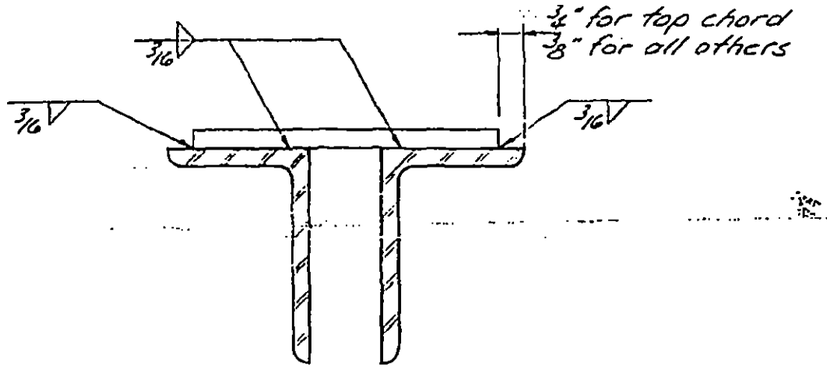

Section a-a

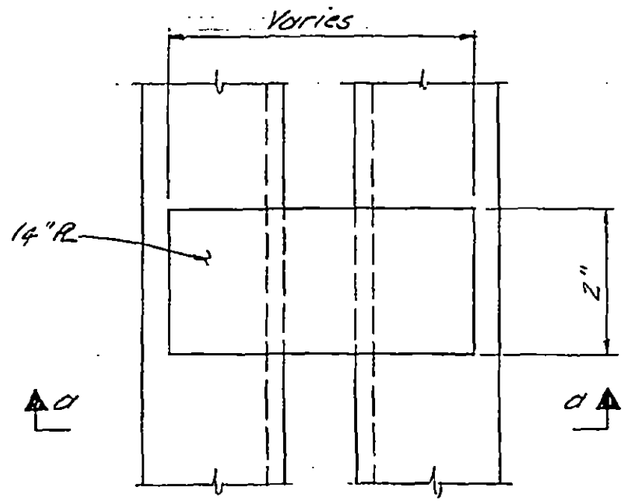

Plan

Note:
Lacing detail applies to all double angle compression members
Lacing bar required at mid-point of each panel, except for the following member sizes where lacing bar is required at ⅓ point, each panel.
- 7L 2x1¼
- 7L 2½x1½
- 7L 3x2

TYPICAL LACING DETAIL FOR JL COMPRESSION MEMBERS

LICENSED PROFESSIONAL ENGINEER — LESLIE E. ROBERTSON — No. 34360 — UNIVERSITY OF THE STATE OF NEW YORK

DESIGNED

DRAWN J. Adams

REVIEWED W. Brewer

7-68-2

1060-L

SKILLING, HELLE, CHRISTIANSEN, ROBERTSON — Structural & Civil Engineers

PROJECT: THE WORLD TRADE CENTER | TITLE: FLOOR TRUSS DETAIL 3.1 | DATE: 3-19-69

REVISIONS

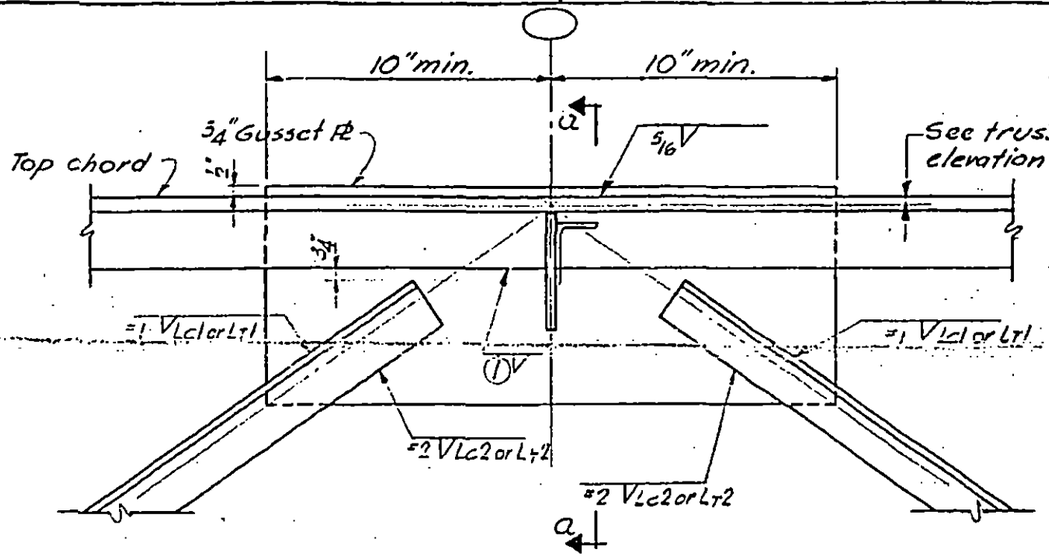

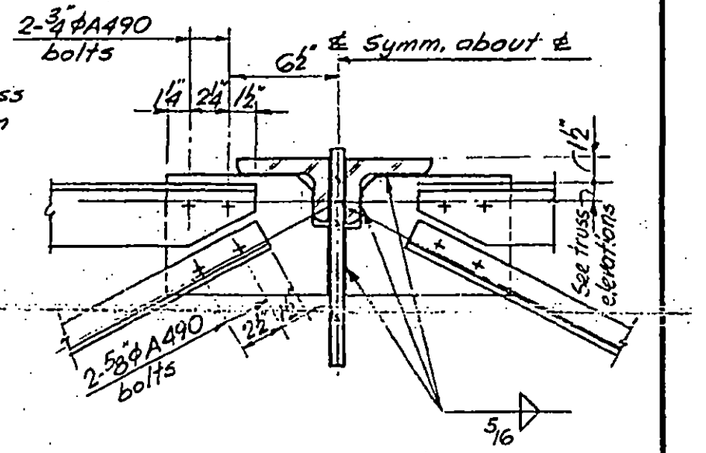

Section a-a

Diagonal member size	Compression				Tension			
	Weld #1	Lc1	Weld #2	Lc2	Weld #1	LT1	Weld #2	LT2
1 × 1 × ¼	—	—	—	—	¼	6	3/16	4
1¼ × 1¼ × ¼	—	—	—	—	¼	6	3/16	4
1¾ × 1¼ × ¼	¼	6	3/16	4	¼	6	3/16	4
1¾ × 1¾ × ¼	¼	6	3/16	4	5/16	6	3/16	4
2 × 1½ × ¼	¼	6	3/16	4	—	—	—	—
2½ × 1½ × ¼	¼	6	3/16	4	¼	7	3/16	5
2½ × 2 × ¼	¼	6	3/16	4	5/16	7	3/16	5
2½ × 1½ × 5/16	¼	6	¼	4	5/16	7	¼	5
2½ × 2 × 5/16	5/16	6	¼	4	3/8	7	¼	5
2½ × 2 × 3/8	5/16	7	¼	5	5/16	9	¼	6
3 × 2 × ¼	5/16	7	3/16	5	—	—	—	—
3 × 2 × 3/8	3/8	7	5/16	5	3/8	9	5/16	6
3 × 2 × 7/16	5/16	9	5/16	6	—	—	—	—
3 × 2 × ½	3/8	9	5/16	6	7/16	9	3/8	6
3 × 2½ × ½	7/16	9	5/16	6	—	—	—	—

Note ① ¼" for 7T ≤ to ¾" thick
5/16" for 7T > than ¾" thick

See 7-B7 for truss elevations.

LICENSED PROFESSIONAL ENGINEER — LESLIE E. ROBERTSON — No. 34990 — UNIVERSITY OF THE STATE OF NEW YORK

DESIGNED K. Hwang
DRAWN J. Gricius
REVIEWED W. Brewer

7-B8-3.1

SKILLING, HELLE, CHRISTIANSEN, ROBERTSON — Structural & Civil Engineers

PROJECT THE WORLD TRADE CENTER | TITLE FLOOR TRUSS DETAIL 3.2, 3.3 | DATE 3-19-69

REVISIONS

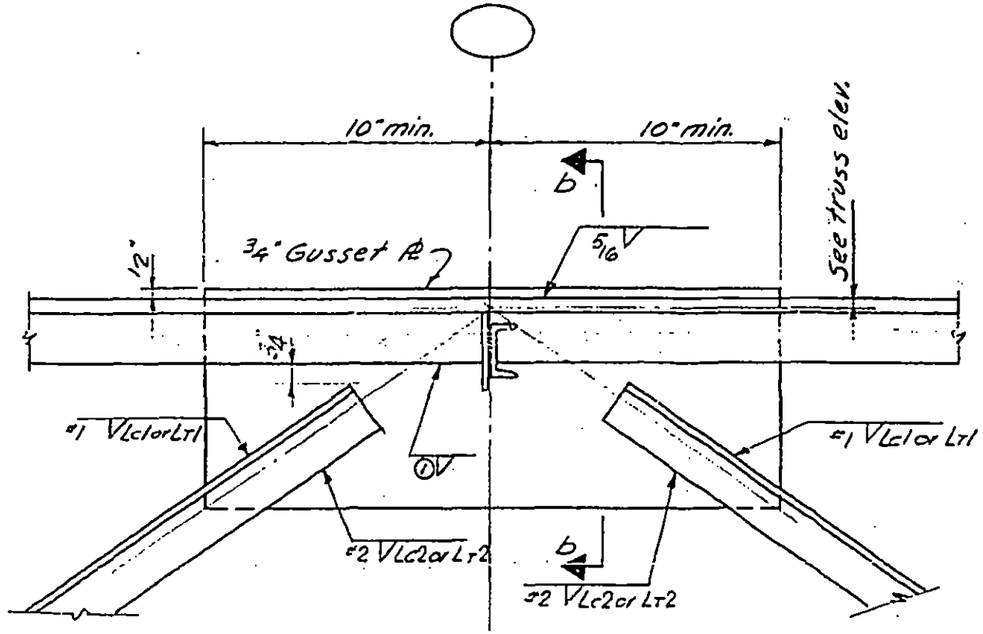

DETAIL 3.2

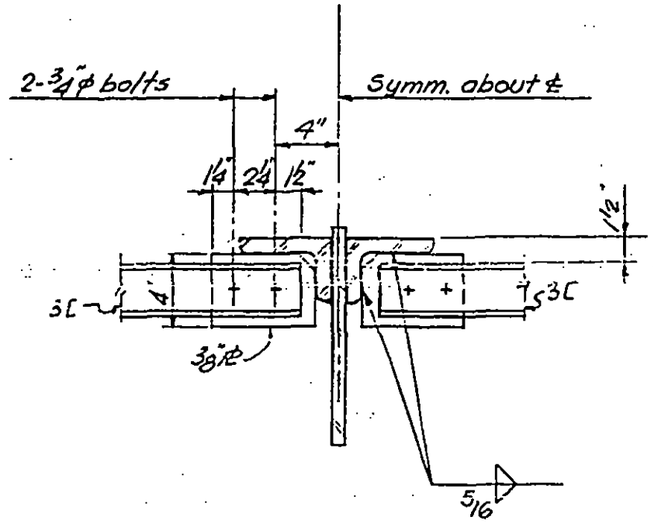

Section b-b

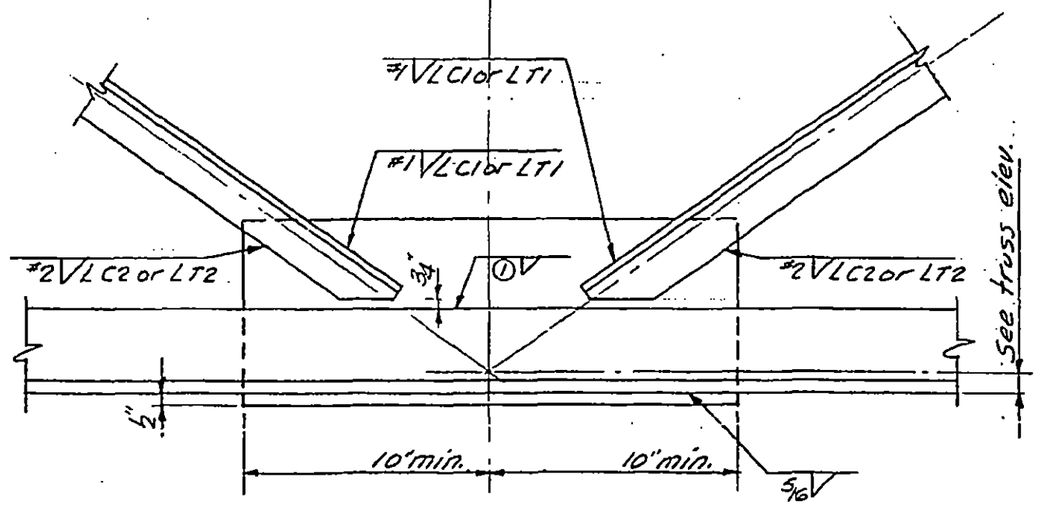

DETAIL 3.3

See table det. 3.1 for welds.
See 7-B7 for truss elevations.

LICENSED PROFESSIONAL ENGINEER — LESLIE E. ROBERTSON — No. 34360 — UNIVERSITY OF THE STATE OF NEW YORK

DESIGNED K. Hwang
DRAWN A.L. FRANQUI
REVIEWED W. Brewer

7-B8-3.2

SKILLING, HELLE, CHRISTIANSEN, ROBERTSON — Structural & Civil Engineers

PROJECT: THE WORLD TRADE CENTER | TITLE: FLOOR TRUSS DETAIL 3.4 & 3.5 | DATE: 3-19-69

REVISIONS

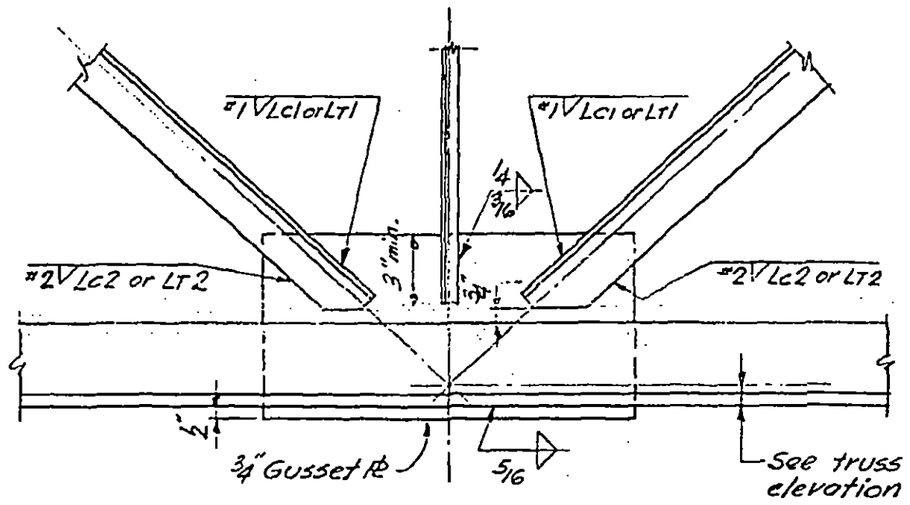

DETAIL 3.4

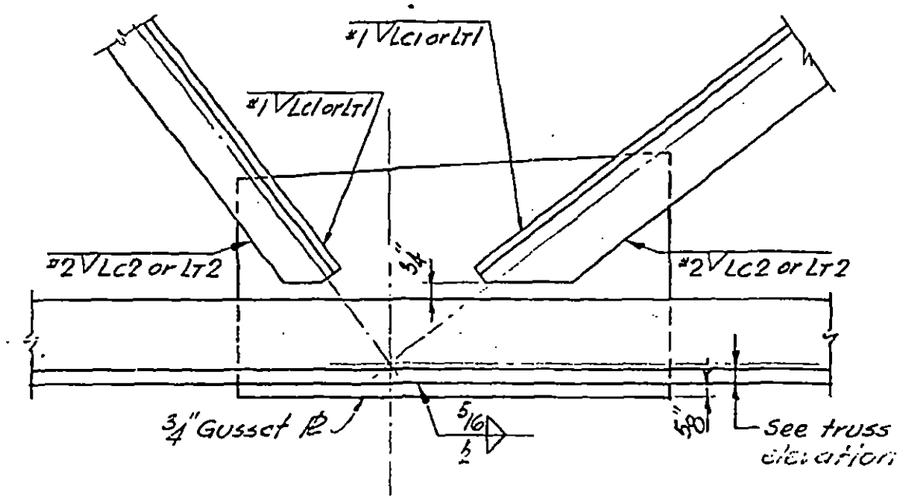

DETAIL 3.5

See 7-B7 for truss elev.
See table detail 3.1 for welds.

7-B8-3.3

LICENSED PROFESSIONAL ENGINEER — LESLIE E. ROBERTSON — No. 34360 — UNIVERSITY OF THE STATE OF NEW YORK

DESIGNED K. Hwang
DRAWN J. Gricius
REVIEWED D. Brewer

SKILLING, HELLE, CHRISTIANSEN, ROBERTSON — Structural & Civil Engineers

PROJECT THE WORLD TRADE CENTER | TITLE FLOOR TRUSS DETAIL 3.6 | DATE 3-19-69

REVISIONS

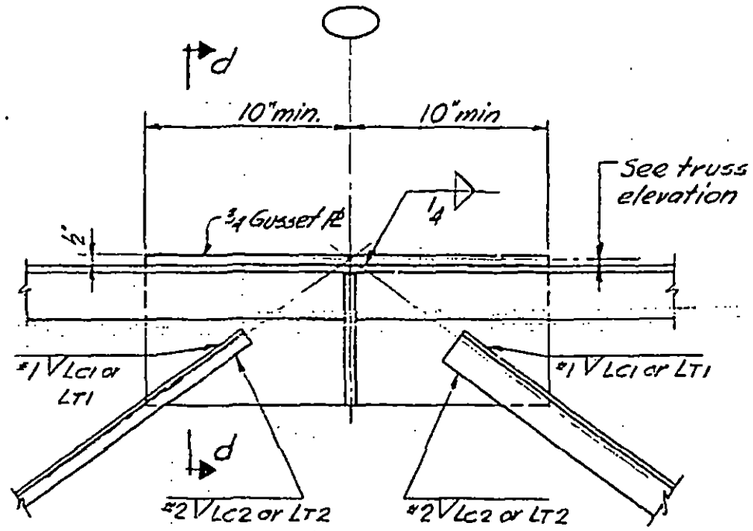

Section c-c

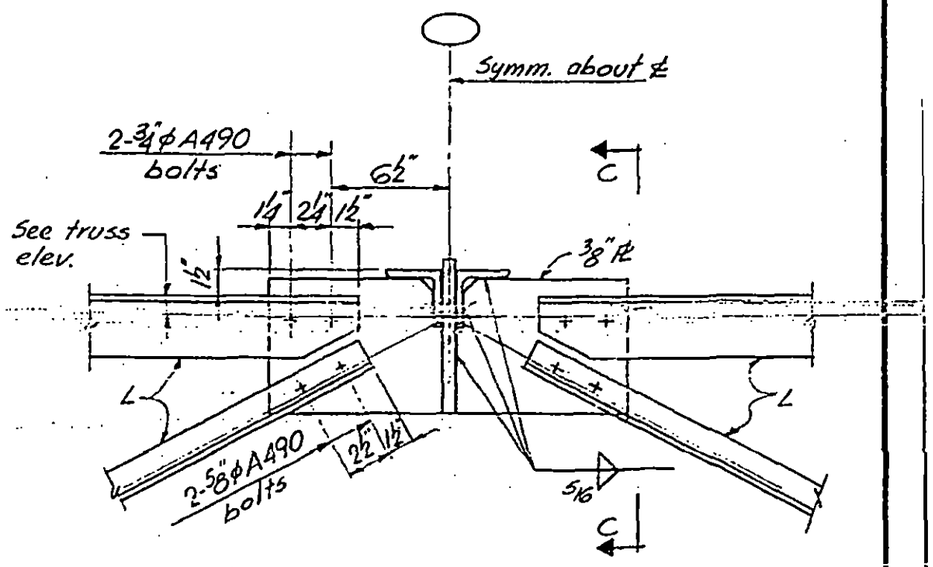

Section d-d

See table det. 3.1 for welds
See 7-B7 for truss elevations

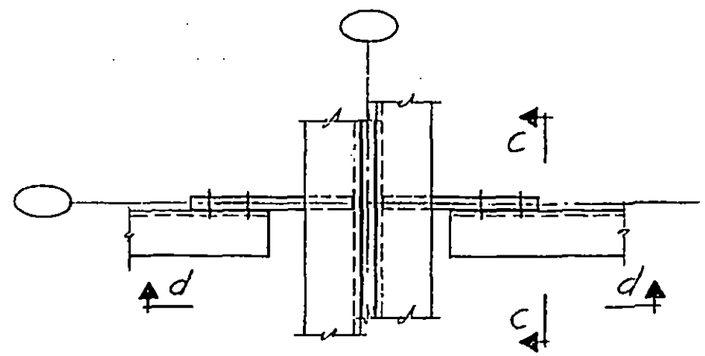

Plan

LICENSED PROFESSIONAL ENGINEER
LESLIE E. ROBERTSON
No. 34360
UNIVERSITY OF THE STATE OF NEW YORK

DESIGNED K. Hwang
DRAWN J. Gricius
REVIEWED W. Brewer

7-B8-3.4

SKILLING, HELLE, CHRISTIANSEN, ROBERTSON — Structural & Civil Engineers

PROJECT: THE WORLD TRADE CENTER | TITLE: FLOOR TRUSS DETAIL 3.7 | DATE: 3-19-69

REVISIONS

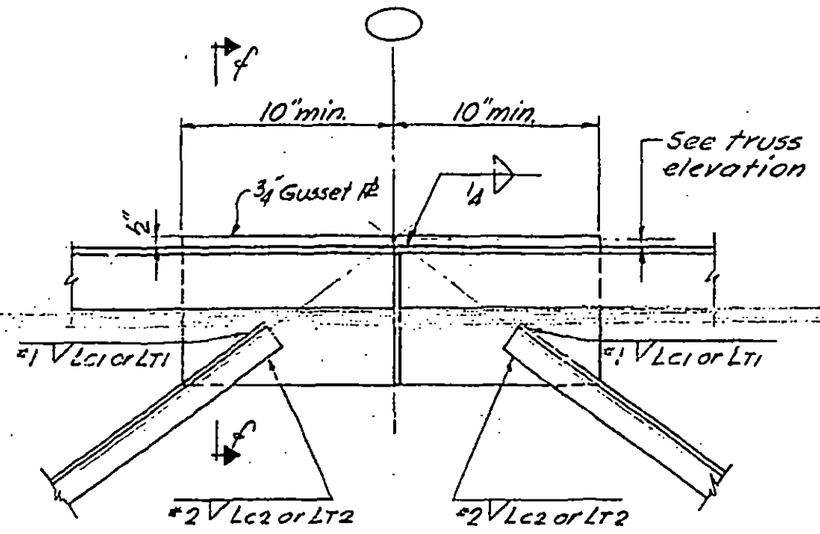

Section e-e

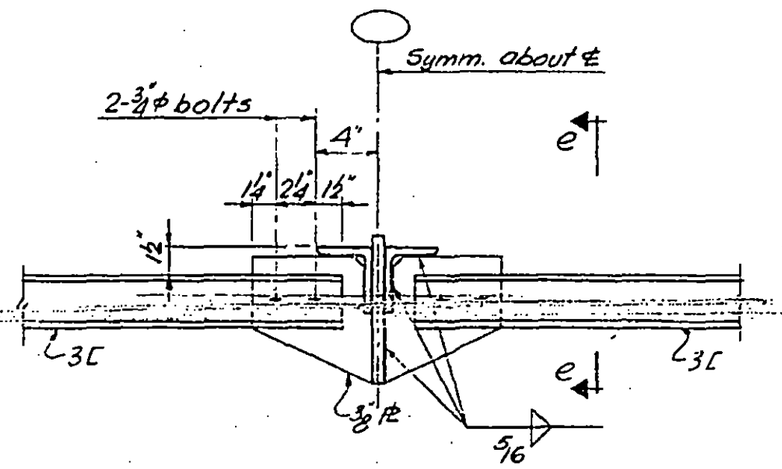

Section f-f

See table det. 3.1 for welds.
See 7-B7 for truss elevations.

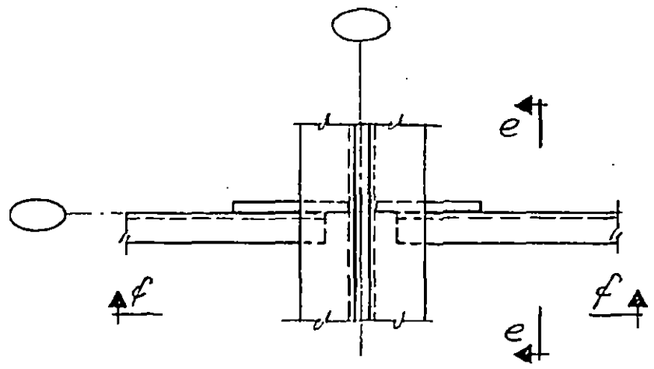

Plan

LICENSED PROFESSIONAL ENGINEER — LESLIE E. ROBERTSON — No. 34360 — UNIVERSITY OF THE STATE OF NEW YORK

DESIGNED K. Howang
DRAWN J. Gricius
REVISED W. Brewer

7-B8-3.5

SKILLING, HELLE, CHRISTIANSEN, ROBERTSON — Structural & Civil Engineers

PROJECT: THE WORLD TRADE CENTER | TITLE: FLOOR TRUSS DETAIL 3.8 | DATE: 3-19-69

REVISIONS

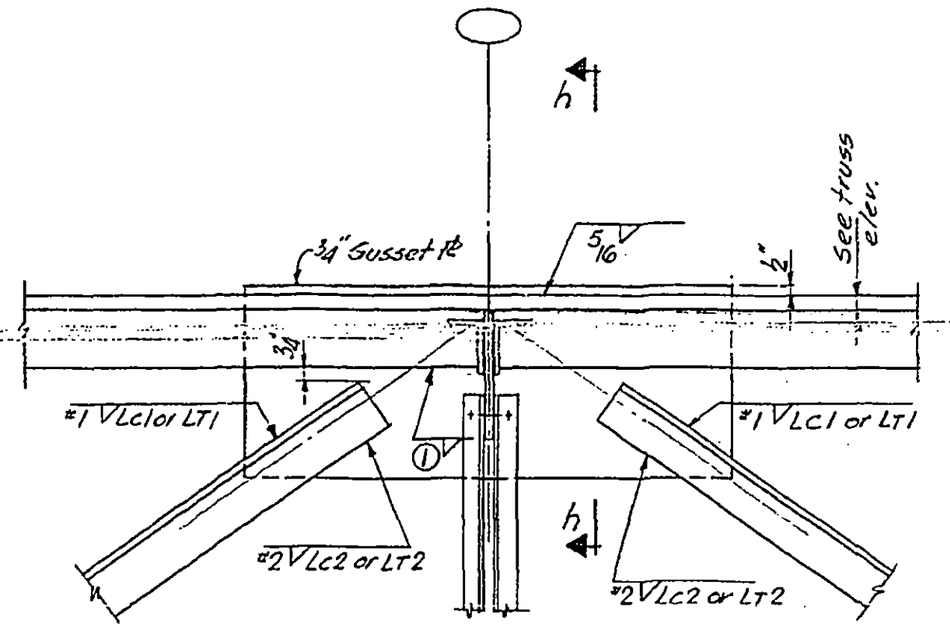

Section g-g

See table det. 3.1 for welds
See 7-B7 for truss elev.

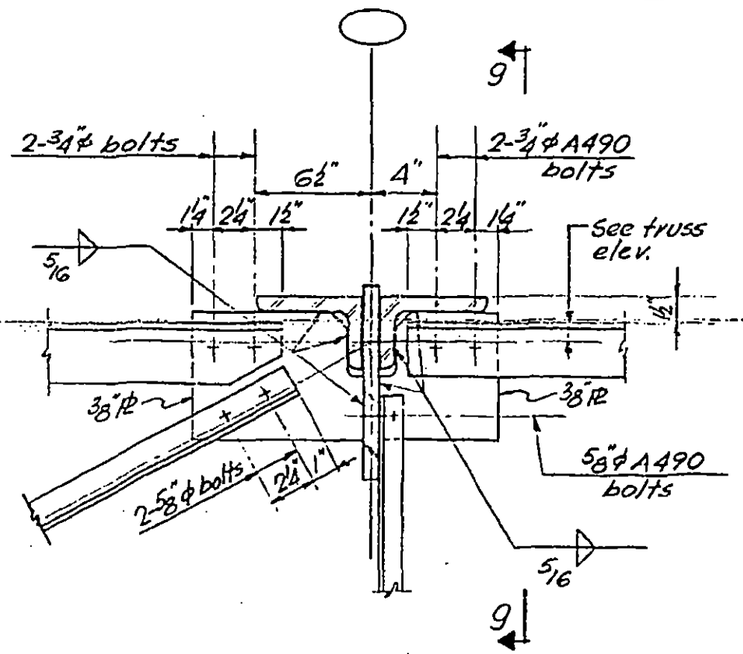

Section h-h

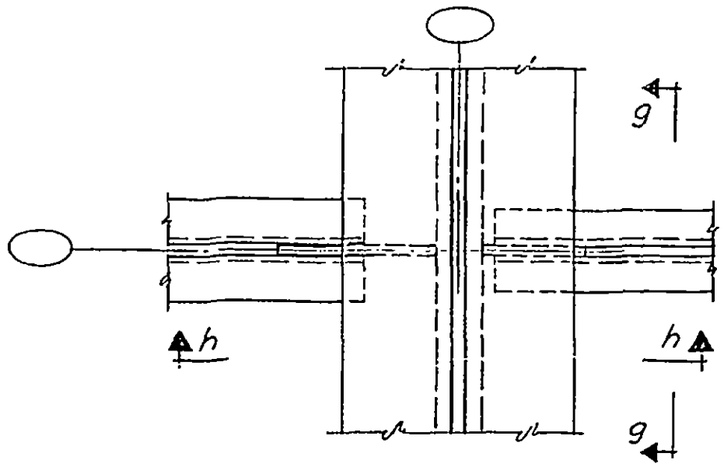

Plan

LICENSED PROFESSIONAL ENGINEER
LESLIE E. ROBERTSON
No. 34360
UNIVERSITY OF THE STATE OF NEW YORK

DESIGNED K. Hwang
DRAWN J. Gricius
REVIEWED W. Brewer

7-B8-3.6

SKILLING, HELLE, CHRISTIANSEN, ROBERTSON — Structural & Civil Engineers

PROJECT: THE WORLD TRADE CENTER | TITLE: FLOOR TRUSS DETAIL 3.9 | DATE: 3-19-69

REVISIONS

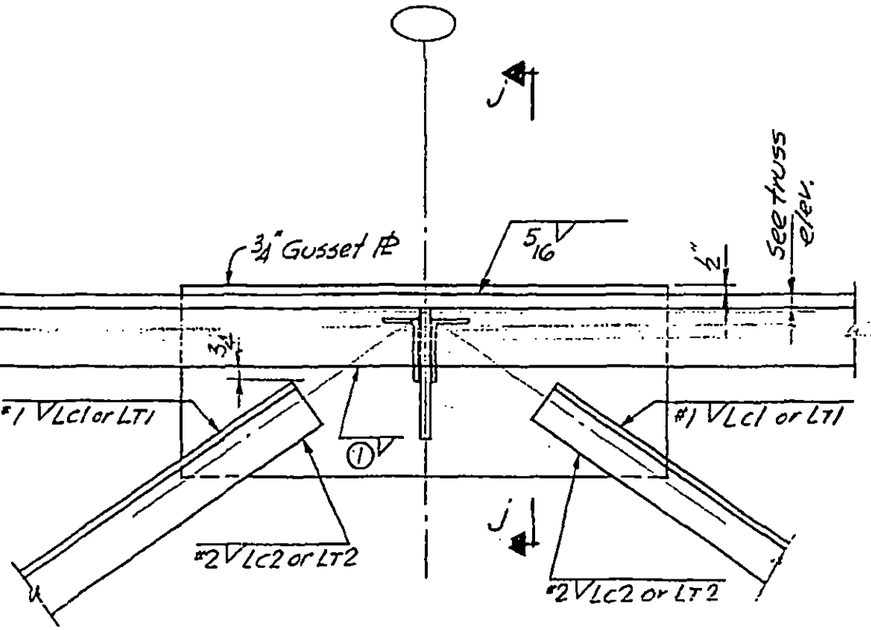

Section i-i

See table det. 3.1 for welds
See 7-B7 for truss elev.

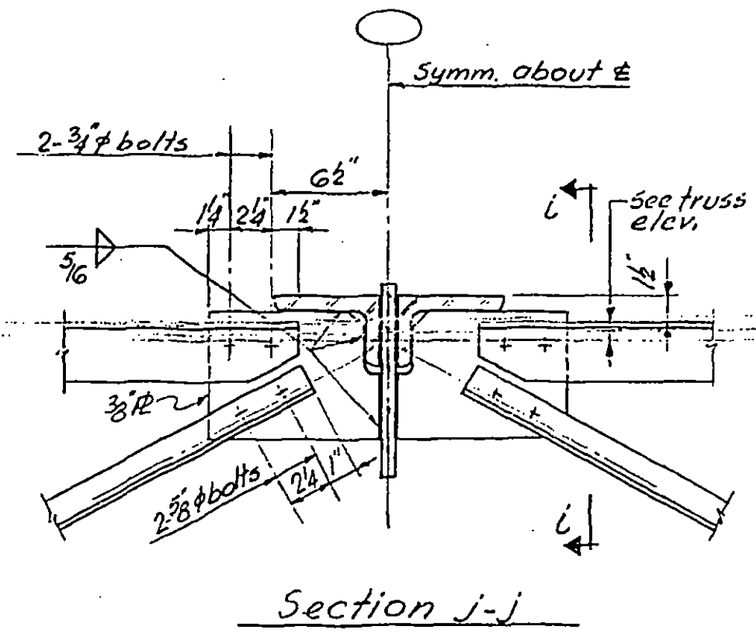

Section j-j

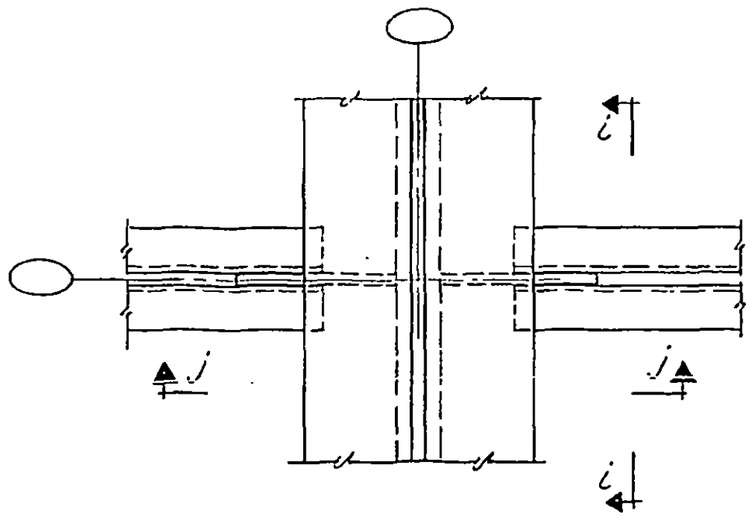

Plan

LICENSED PROFESSIONAL ENGINEER
LESLIE E. ROBERTSON
No. 34360
UNIVERSITY OF THE STATE OF NEW YORK

DESIGNED K. Ibwang
DRAWN J. Gricius
REVIEWED W. Brewer

7-B8-3.7

SKILLING, HELLE, CHRISTIANSEN, ROBERTSON — Structural & Civil Engineers

PROJECT: THE WORLD TRADE CENTER | TITLE: FLOOR TRUSS DETAILS 3.10 & 3.11 | DATE: 3-19-69

REVISIONS

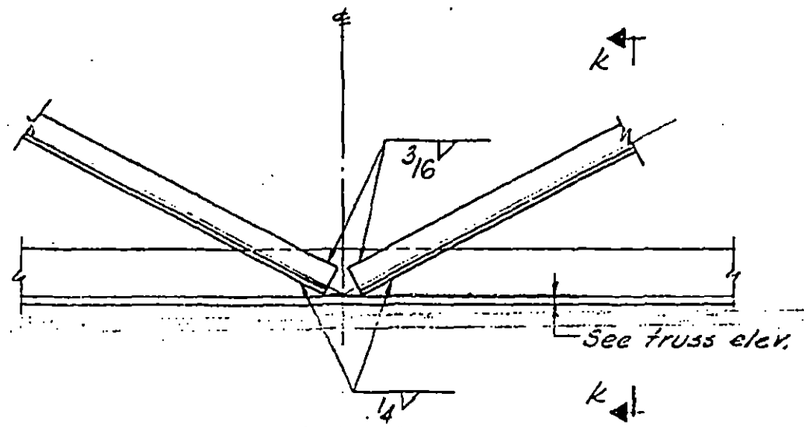

Detail 3.10

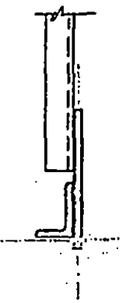

Section k-k

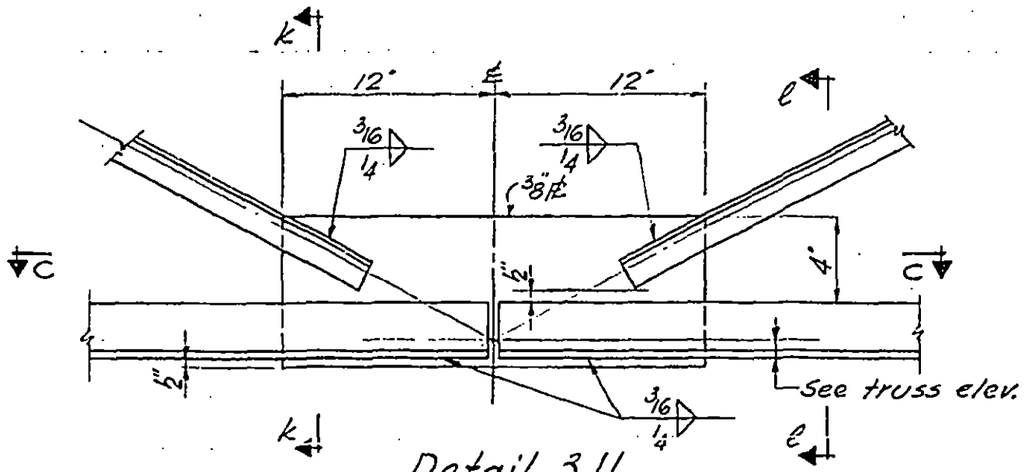

Detail 3.11

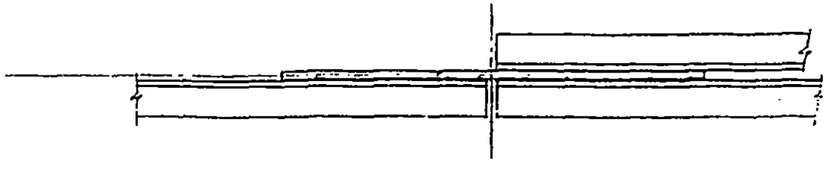

Plan

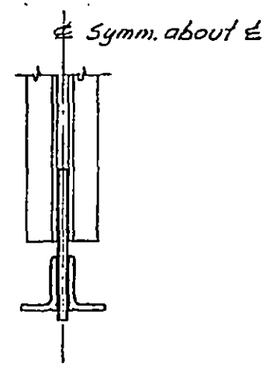

Section ℓ-ℓ

See 7-B7 for truss elev.

LICENSED PROFESSIONAL ENGINEER — LESLIE E. ROBERTSON — No. 34360 — UNIVERSITY OF THE STATE OF NEW YORK

DESIGNED K. Hwang
DRAWN J. Gricius
REVIEWED W. Brewer

7-B8-3.8

SKILLING, HELLE, CHRISTIANSEN, ROBERTSON — Structural & Civil Engineers

PROJECT: THE WORLD TRADE CENTER | TITLE: FLOOR TRUSS DETAIL 3.12 | DATE: 3-19-69

REVISIONS

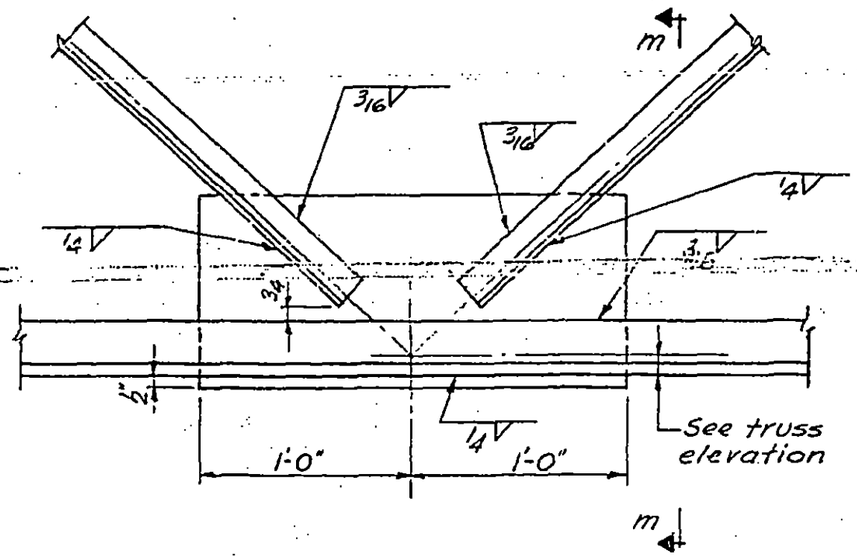

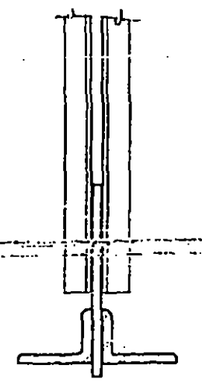

Section m-m

See 7-B7 for truss elev.

LICENSED PROFESSIONAL ENGINEER
LESLIE E. ROBERTSON
No. 34360
UNIVERSITY OF THE STATE OF NEW YORK

DESIGNED K. Howard

DRAWN J. Gricius

REVIEWED W. Brewer

7-B8-3.9

SKILLING, HELLE, CHRISTIANSEN, ROBERTSON — Structural & Civil Engineers

PROJECT: THE WORLD TRADE CENTER | TITLE: FLOOR TRUSS DETAIL 3.13 | DATE: 3-19-69

REVISIONS

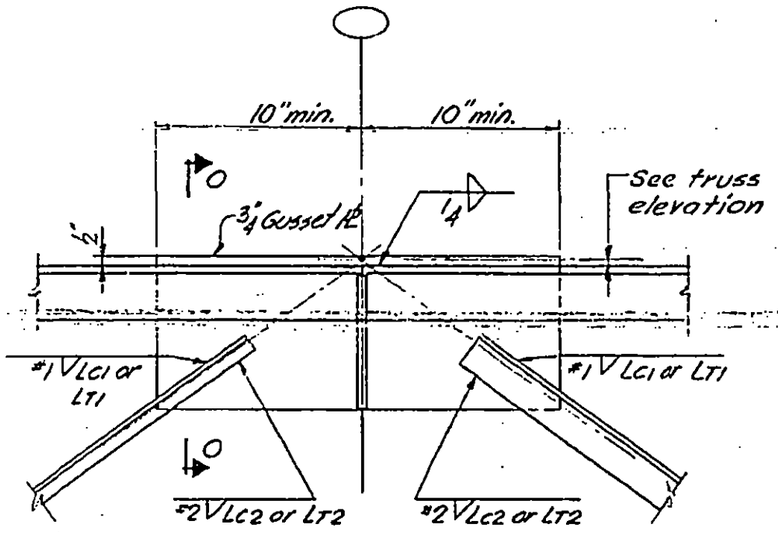

Section n-n

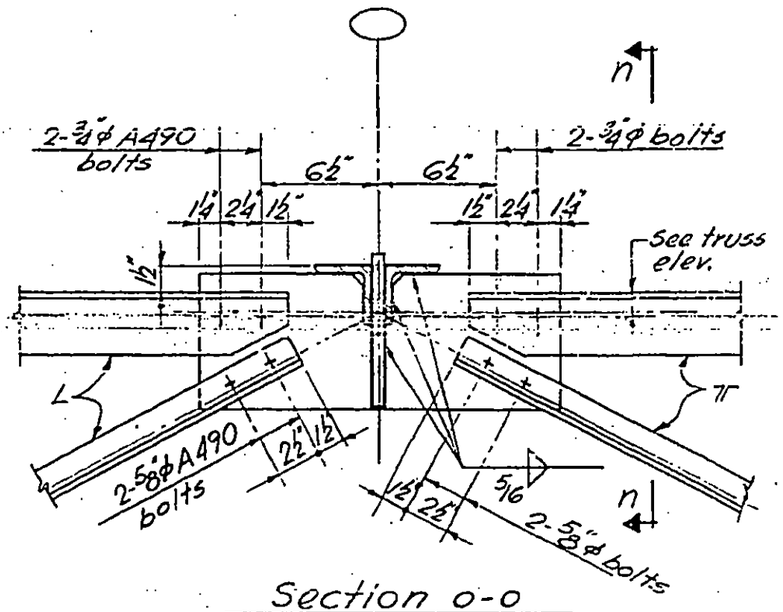

Section o-o

See table det. 3.1 for welds
See 7-B7 for truss elevations

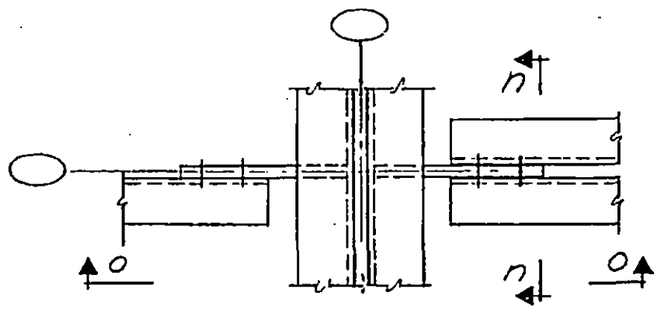

Plan

LICENSED PROFESSIONAL ENGINEER — LESLIE E. ROBERTSON — No. 34360 — UNIVERSITY OF THE STATE OF NEW YORK

DESIGNED K. Hwang
DRAWN J. Gricius
REVIEWED W. Brewer

7-B8-3.10

SKILLING, HELLE, CHRISTIANSEN, ROBERTSON — Structural & Civil Engineers

PROJECT: THE WORLD TRADE CENTER | TITLE: FLOOR TRUSS DETAIL 3.14 | DATE: 3-19-69

REVISIONS

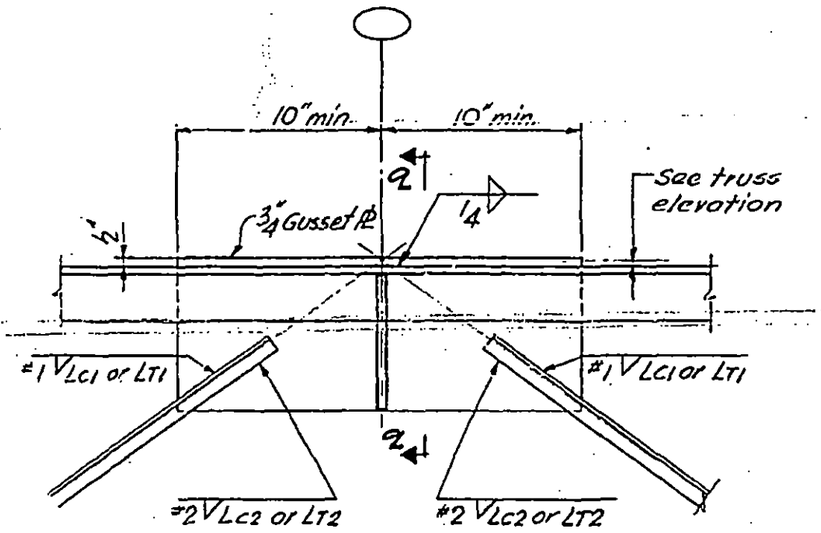

Section p-p

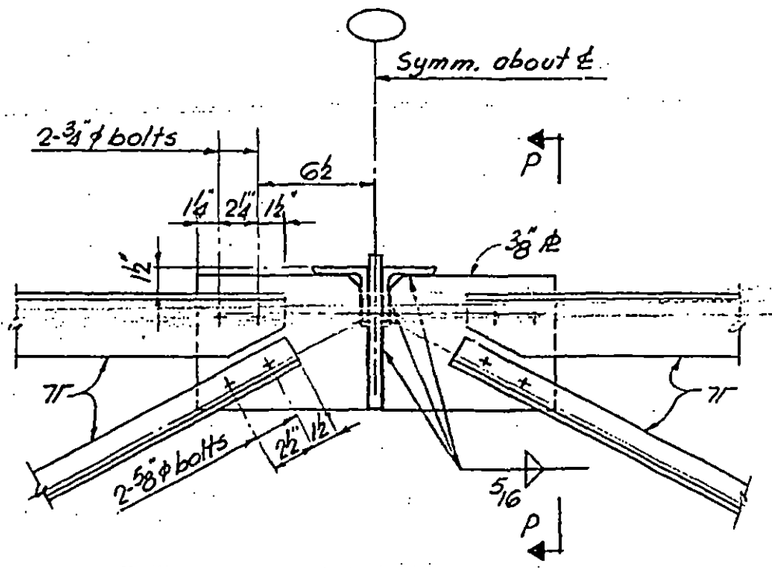

Section q-q

See table det. 3.1 for welds
see 7-B7 for truss elevations

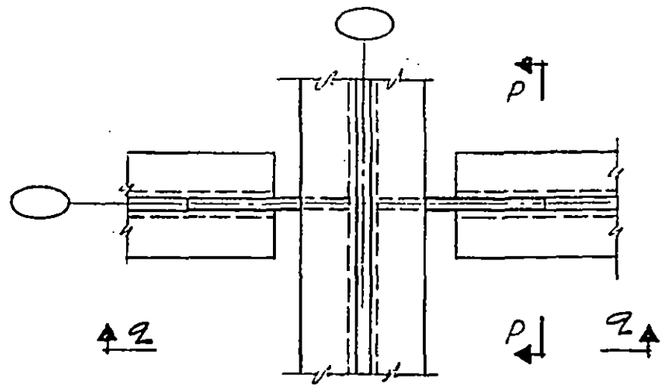

Plan

LICENSED PROFESSIONAL ENGINEER — LESLIE E. ROBERTSON — No. 34360 — UNIVERSITY OF THE STATE OF NEW YORK

DESIGNED K. Hwang
DRAWN J. Gricius
REVIEWED W. Brewer

7-B8-3.11

SKILLING, HELLE, CHRISTIANSEN, ROBERTSON — Structural & Civil Engineers

PROJECT: THE WORLD TRADE CENTER | TITLE: FLOOR TRUSS DETAIL 3.15 | DATE: 3-19-69

REVISIONS

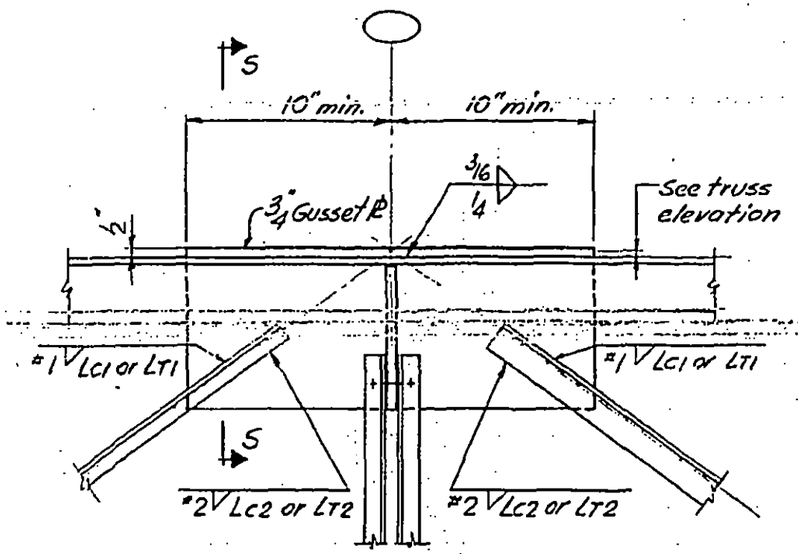

Section r-r

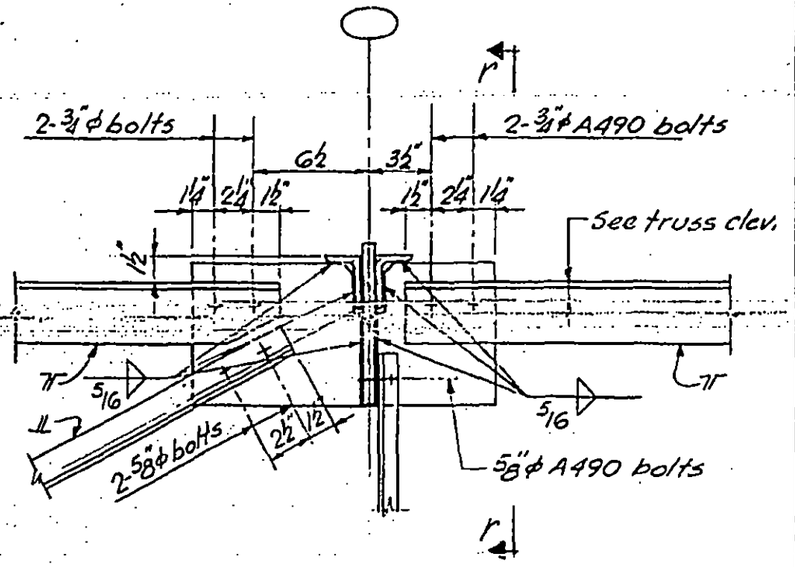

Section s-s

See table det. 3.1 for welds
See 7-B7 for truss elevations

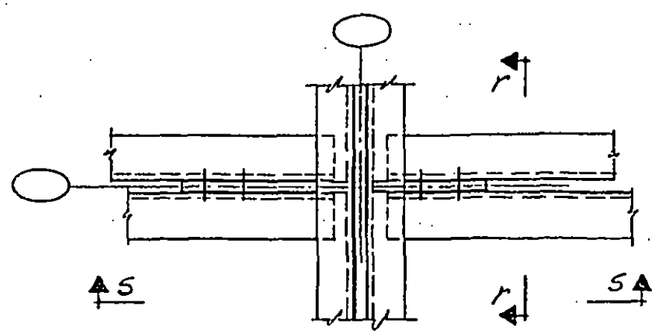

Plan

LICENSED PROFESSIONAL ENGINEER
LESLIE E. ROBERTSON
No. 34360
UNIVERSITY OF THE STATE OF NEW YORK

DESIGNED K. Hwang
DRAWN J. Gricius
REVIEWED W. Brewer

7-B8-3.12

SKILLING, HELLE, CHRISTIANSEN, ROBERTSON — Structural & Civil Engineers

PROJECT: THE WORLD TRADE CENTER | TITLE: FLOOR TRUSS DETAIL 3.16 | DATE: 3-19-69

REVISIONS

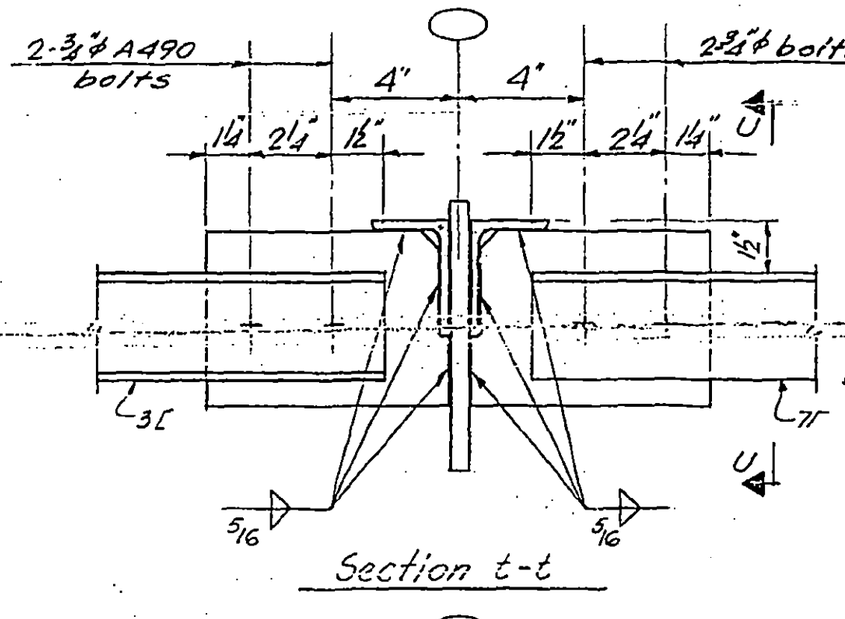

Section t-t

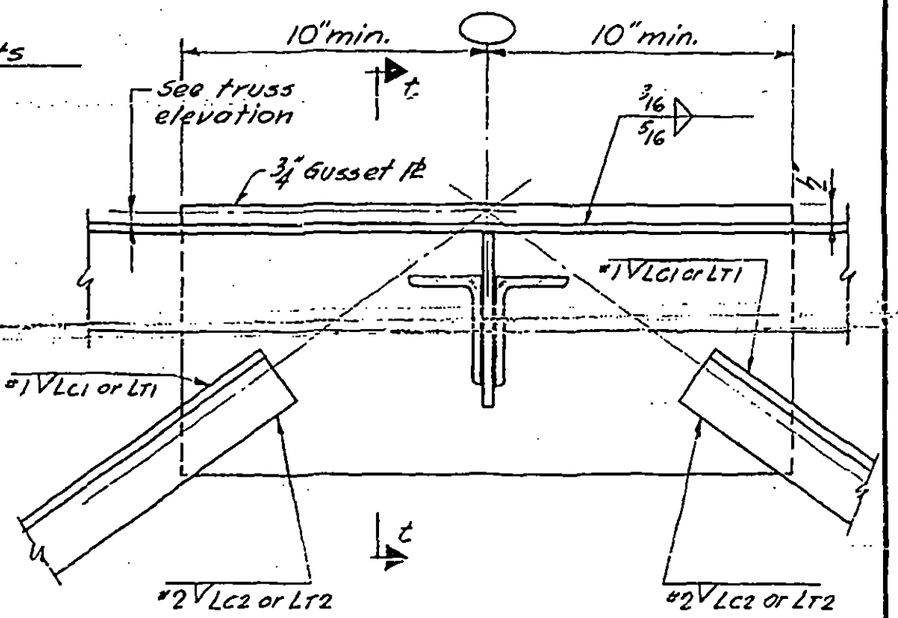

Section u-u

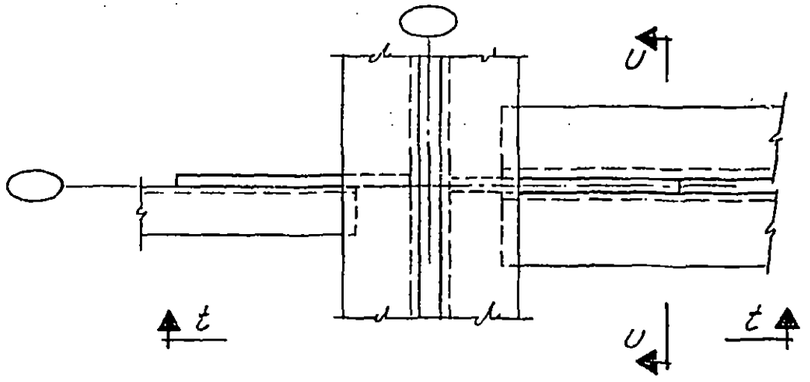

Plan

See table det 3.1 for welds.
See 7-B7 for truss elevations.

LICENSED PROFESSIONAL ENGINEER
LESLIE E. ROBERTSON
No. 34360
UNIVERSITY OF THE STATE OF NEW YORK

DESIGNED K. Bhwang
DRAWN J. Gricius
REVIEWED W. Brewer

7-B8-3.13

SKILLING, HELLE, CHRISTIANSEN, ROBERTSON — Structural & Civil Engineers

PROJECT: THE WORLD TRADE CENTER | TITLE: FLOOR TRUSS DETAIL 3.17 | DATE: 3-19-69

REVISIONS

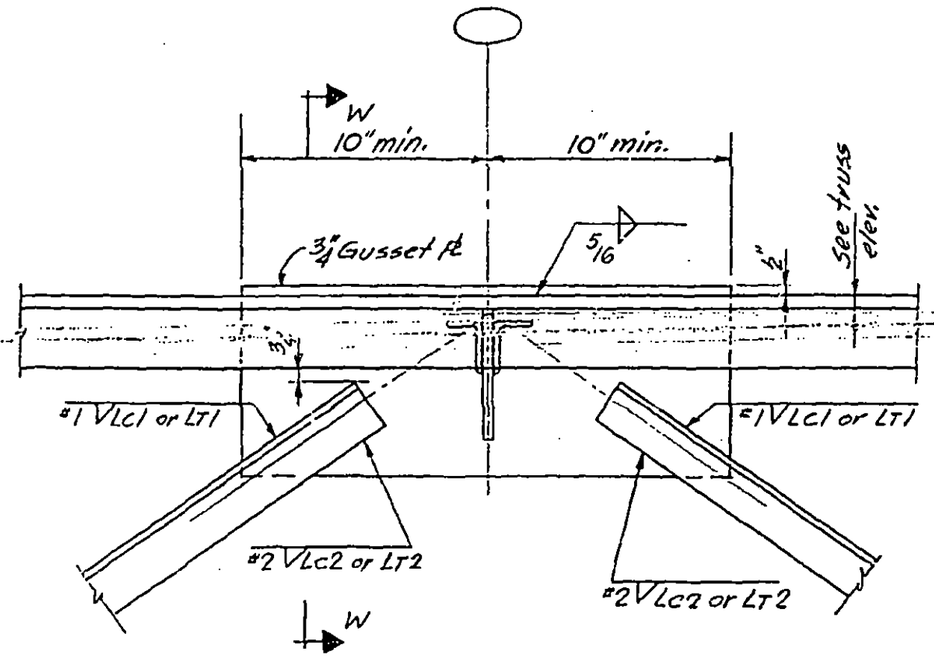

Section V-V

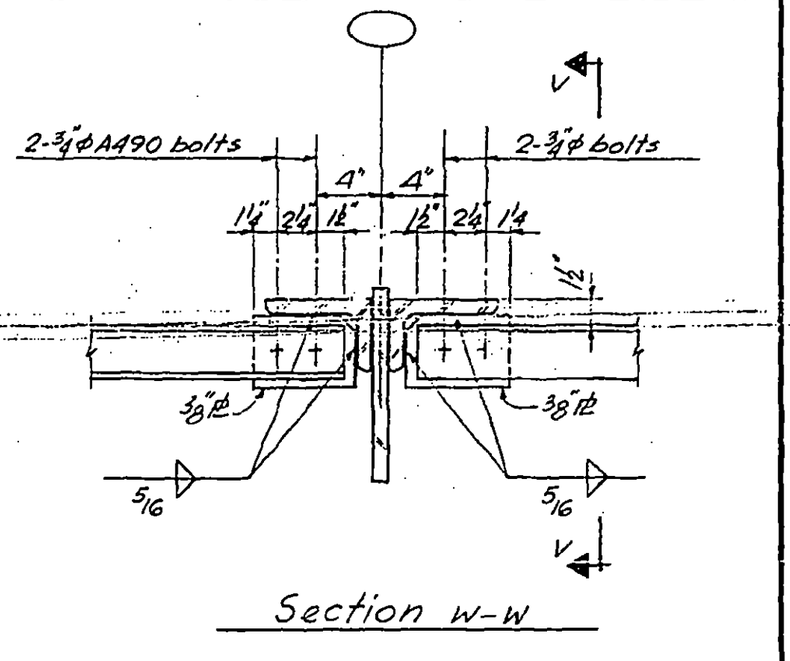

Section W-W

See table det. 3.1 for welds.
See 7-B7 for truss elev.

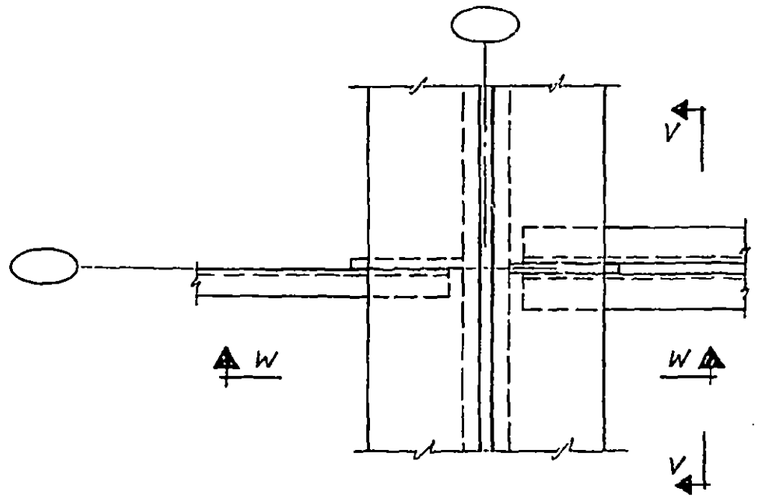

Plan

LICENSED PROFESSIONAL ENGINEER
LESLIE E. ROBERTSON
No. 34360
UNIVERSITY OF THE STATE OF NEW YORK

DESIGNED K. Howard
DRAWN J. Gricius
REVIEWED W. Brewer

7-B8-3.14

SKILLING, HELLE, CHRISTIANSEN, ROBERTSON — Structural & Civil Engineers

PROJECT: THE WORLD TRADE CENTER | TITLE: FLOOR TRUSS DETAIL 3.18 & 3.19 | DATE: 3-19-69

REVISIONS

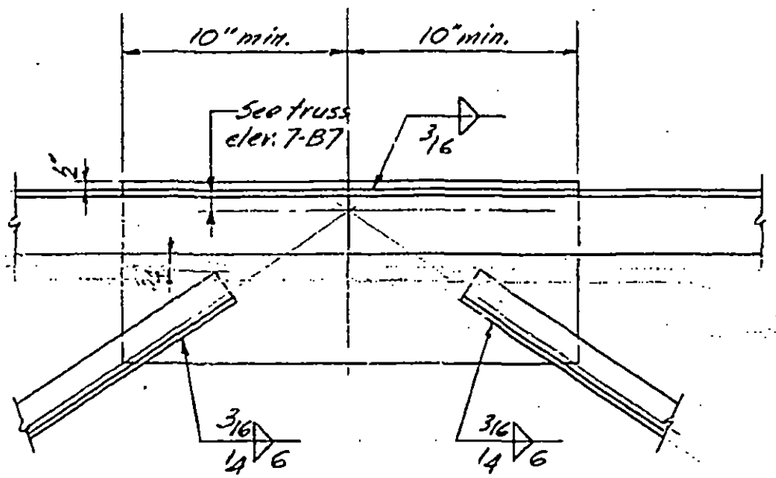

DETAIL 3.18

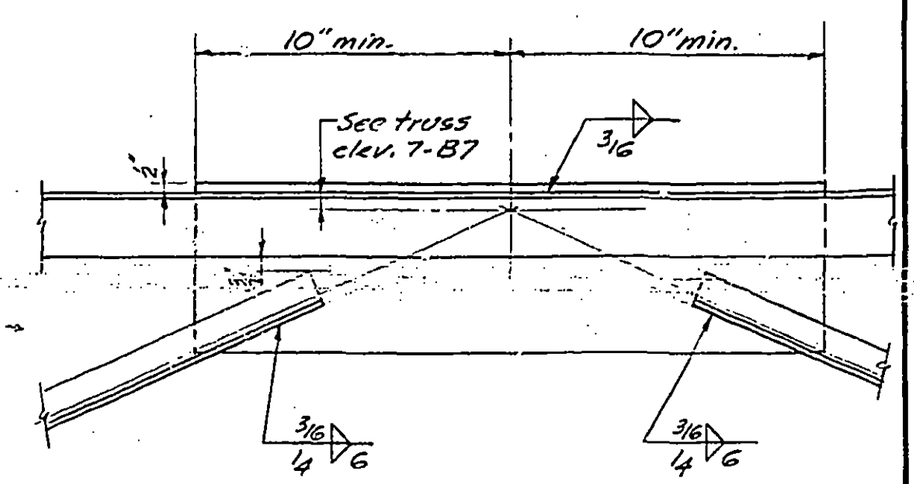

DETAIL 3.19

LICENSED PROFESSIONAL ENGINEER
LESLIE E. ROBERTSON
No. 34360
UNIVERSITY OF THE STATE OF NEW YORK

DESIGNED K. Howard
DRAWN J. Gricius
REVIEWED W. Brewer

7-66-3.15

SKILLING, HELLE, CHRISTIANSEN, ROBERTSON — Structural & Civil Engineers

PROJECT: THE WORLD TRADE CENTER | TITLE: FLOOR TRUSS DETAIL 3.20 | DATE: 3-19-69

REVISIONS

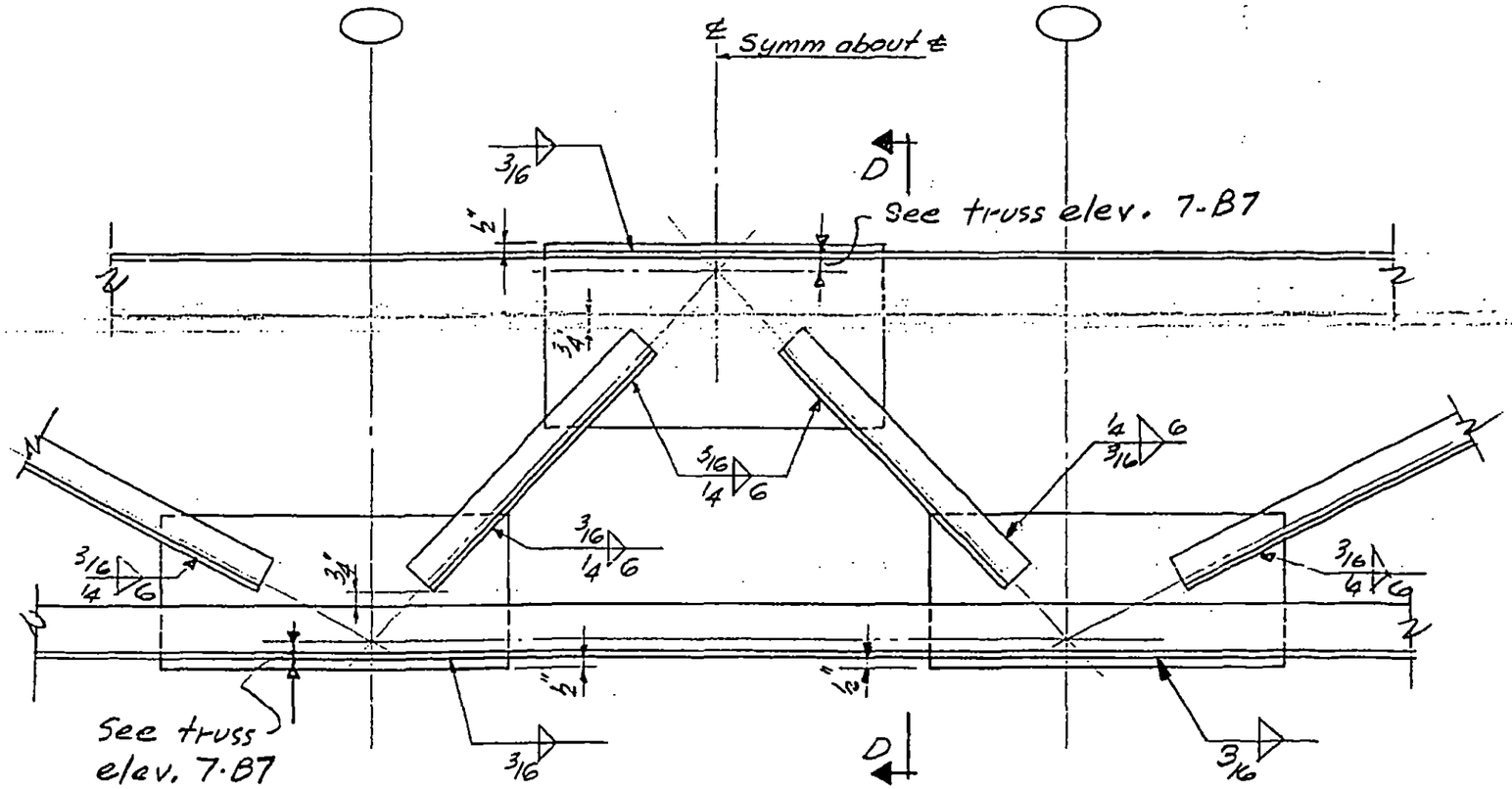

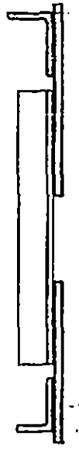

Section D-D

LICENSED PROFESSIONAL ENGINEER — LESLIE E. ROBERTSON — No. 34360 — UNIVERSITY OF THE STATE OF NEW YORK

DESIGNED K. Hwang

DRAWN J. Gricius

REVIEWED W. Brewer

7-B8-3.16

SKILLING, HELLE, CHRISTIANSEN, ROBERTSON — Structural & Civil Engineers

PROJECT: THE WORLD TRADE CENTER | TITLE: FLOOR TRUSS DETAILS 4.1, 4.2, 4.3 | DATE: 3-19-69

REVISIONS

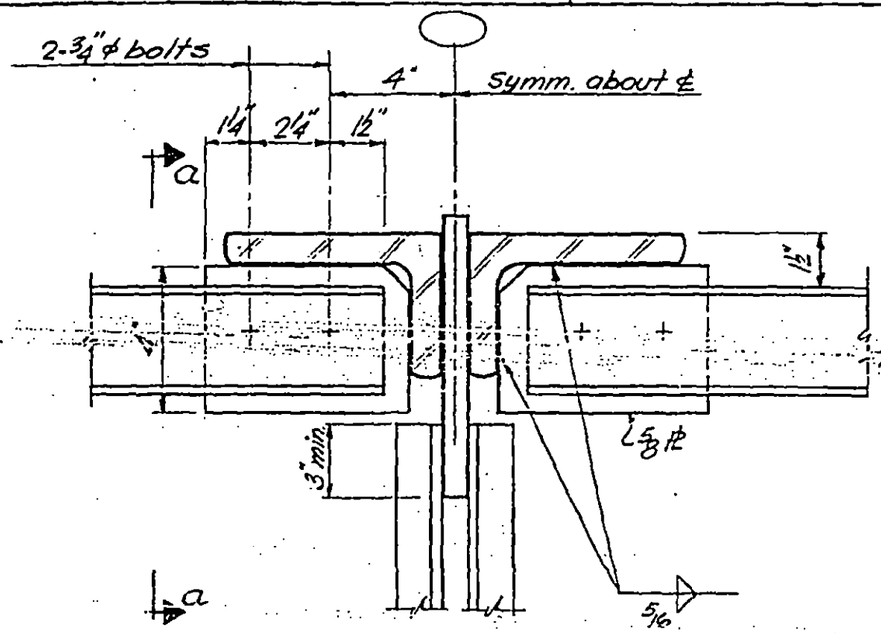

Detail 4.1

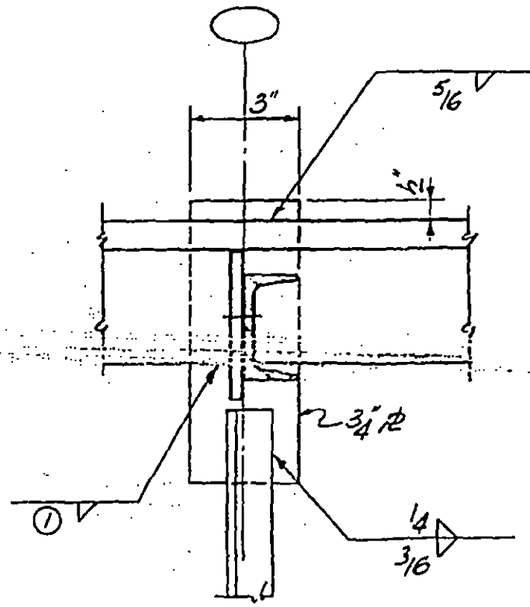

Section a-a

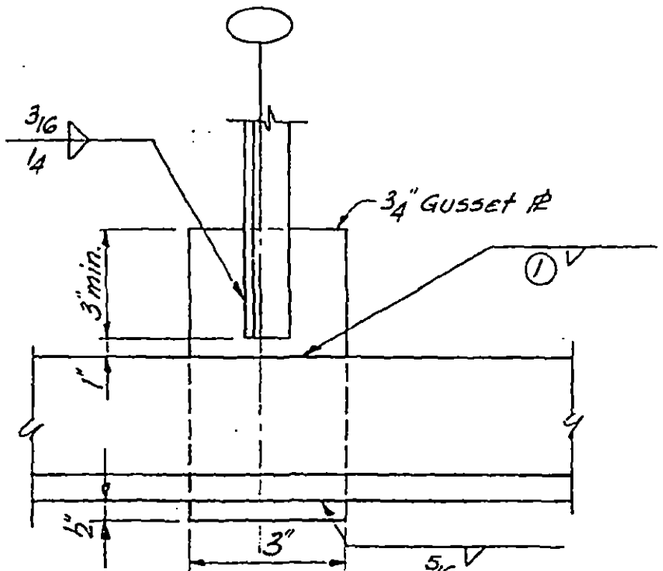

Detail 4.3

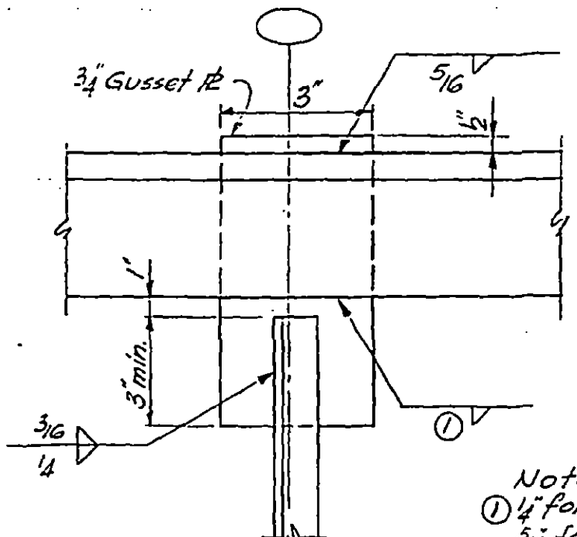

Note:
① ¼" for 7r ≤ to ¾" thick.
5/16" for 7r > than ¾" thick.
See 7-B7 for truss elev.

Detail 4.2

7-B8-4.1

LICENSED PROFESSIONAL ENGINEER — LESLIE E. ROBERTSON — No. 34380 — UNIVERSITY OF THE STATE OF NEW YORK

DESIGNED K. Hwang
DRAWN J. Gricius
REVIEWED

SKILLING, HELLE, CHRISTIANSEN, ROBERTSON — Structural & Civil Engineers

PROJECT THE WORLD TRADE CENTER | TITLE FLOOR TRUSS DETAILS 4.4 | DATE 3-19-69

REVISIONS

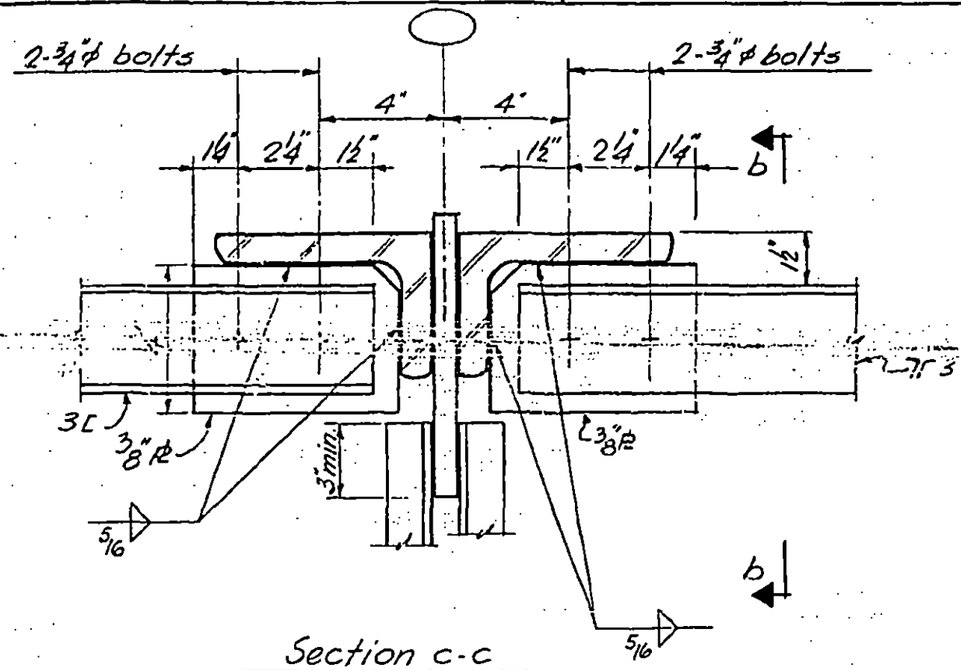

Section c-c

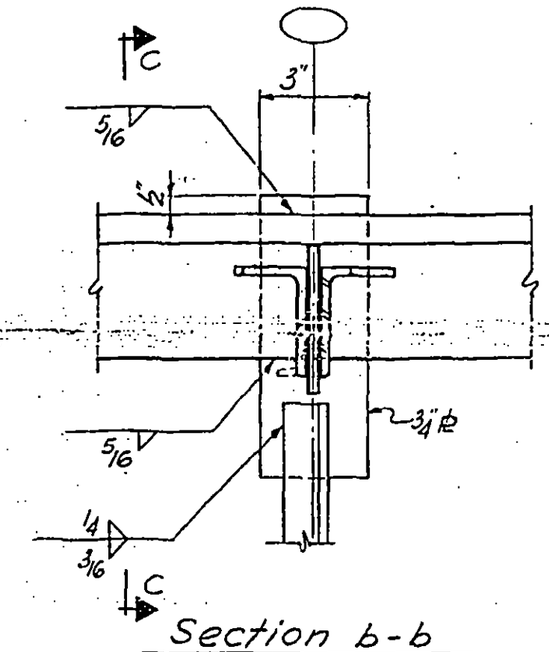

Section b-b

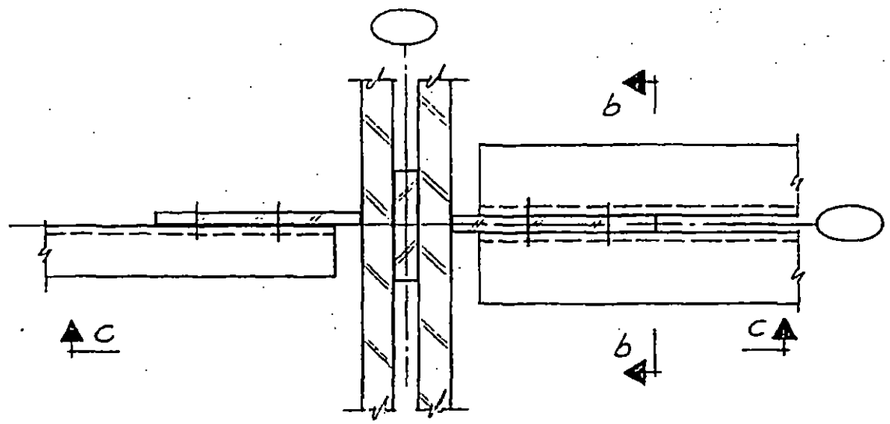

Plan

See 7-B7 for truss elev.

LICENSED PROFESSIONAL ENGINEER
LESLIE E. ROBERTSON
No. 34360
UNIVERSITY OF THE STATE OF NEW YORK

DESIGNED K. Ghwang
DRAWN J. Gricius
REVIEWED D. Brewer R.

7-B8-4.2

SKILLING, HELLE, CHRISTIANSEN, ROBERTSON — Structural & Civil Engineers

PROJECT: THE WORLD TRADE CENTER | TITLE: FLOOR TRUSS DETAIL 4.5 | DATE: 3-19-69

REVISIONS

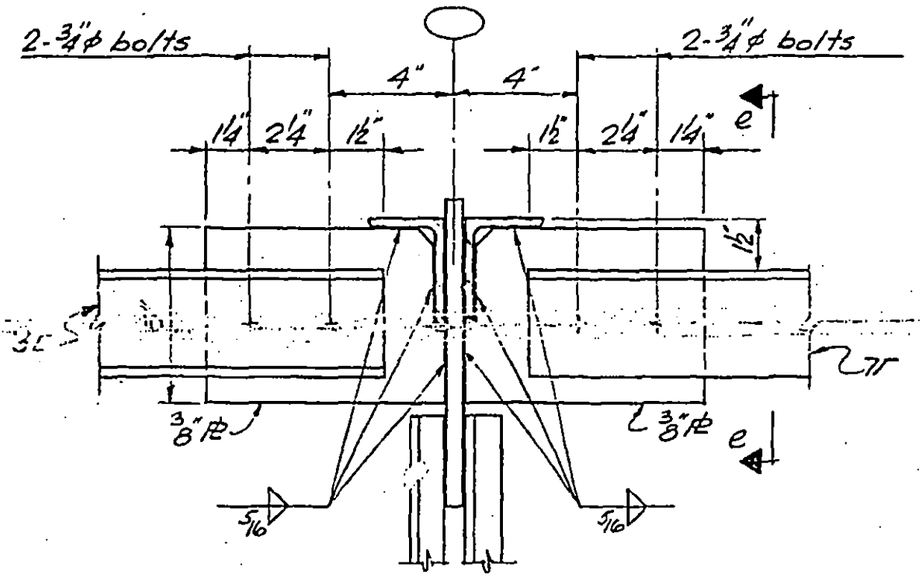

Section d-d

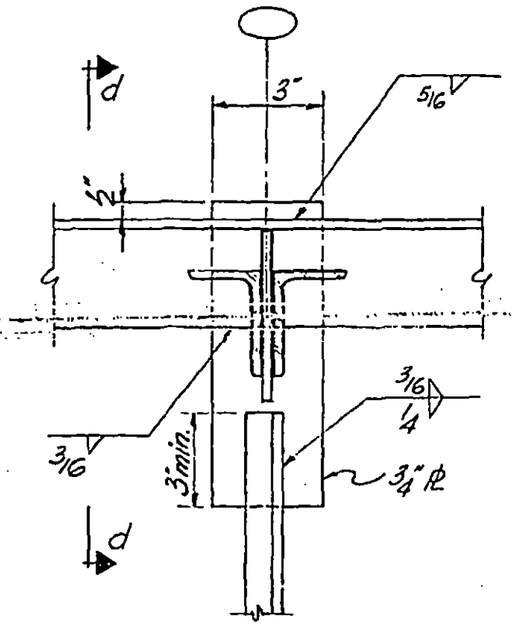

Section e-e

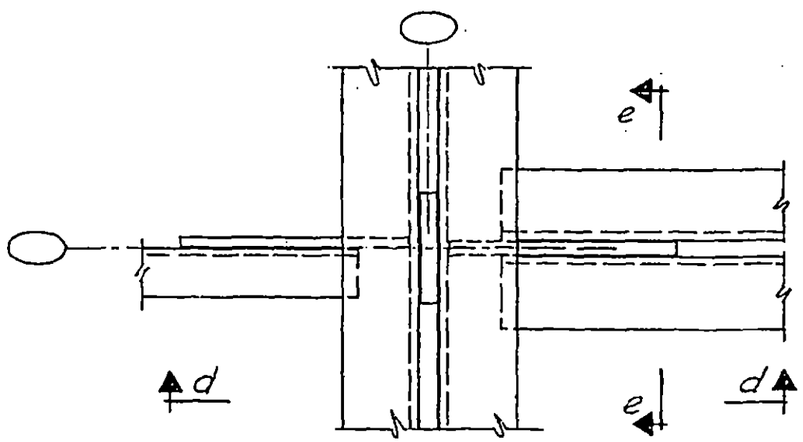

Plan

See 7-B7 for truss elev.

LICENSED PROFESSIONAL ENGINEER — LESLIE E. ROBERTSON — No. 34360 — UNIVERSITY OF THE STATE OF NEW YORK

DESIGNED K. Hwang

DRAWN J. Gricius

REVIEWED W. Brewer

7-B8-4.3

SKILLING, HELLE, CHRISTIANSEN, ROBERTSON — Structural & Civil Engineers

PROJECT: THE WORLD TRADE CENTER | TITLE: FLOOR TRUSS DETAIL 4.6 | DATE: 3-19-69

REVISIONS

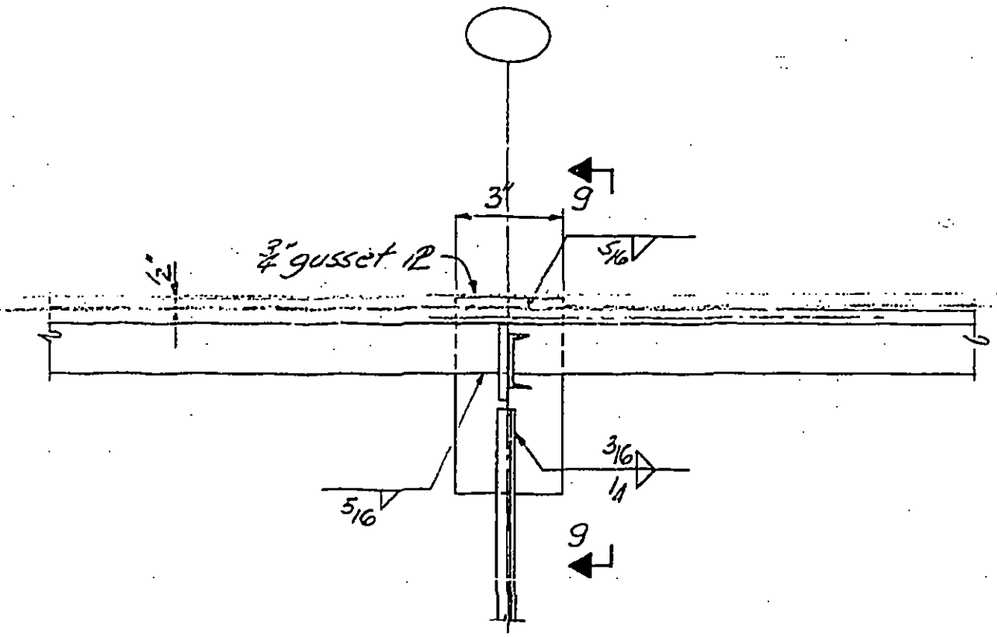

Section f-f

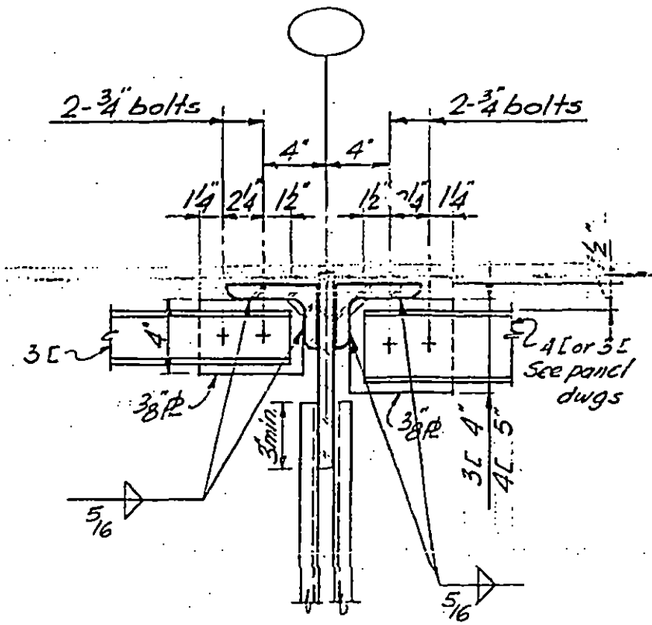

Section g-g

See 7-B7 for truss elev.

LICENSED PROFESSIONAL ENGINEER — LESLIE E. ROBERTSON — No. 34360 — UNIVERSITY OF THE STATE OF NEW YORK

DESIGNED K. Hwang

DRAWN J. Adams

REVIEWED W. Brewer

7-B8-4.4

SKILLING, HELLE, CHRISTIANSEN, ROBERTSON — Structural & Civil Engineers

PROJECT: THE WORLD TRADE CENTER | TITLE: FLOOR TRUSS DETAIL 5.1 | DATE: 3-19-69

REVISIONS

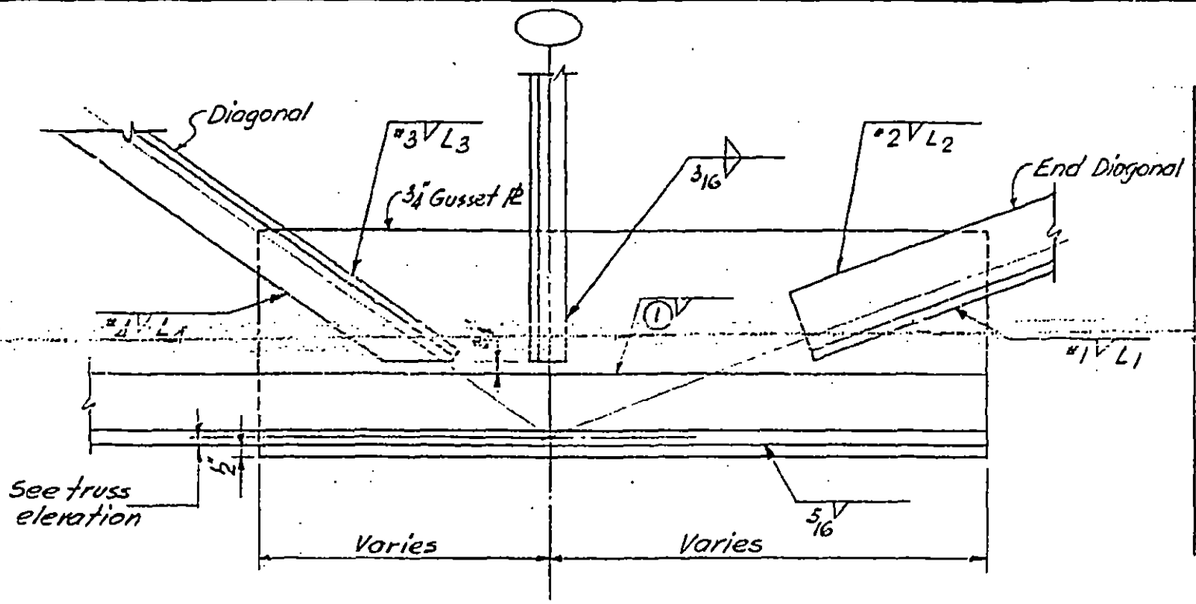

Member size	End Diagonal			
	Weld #1	L_1	Weld #2	L_2
1¼ x 1¼ x ¼	¼	6	3/16	4
1¾ x 1¾ x ¼	5/16	6	3/16	4
3 x 2 x ¼	3/8	6	3/16	6
2½ x 2 x 5/16	3/8	7	¼	5
2½ x 2 x 3/8	3/8	8	¼	6
3 x 2 x 7/16	3/8	9	5/16	6
3 x 2 x 3/8	3/8	9	5/16	6
3 x 2 x ½	7/16	9	3/8	6
4 x 3½ x 3/8	9/16	10	5/16	7
4 x 3½ x ½	11/16	10	7/16	7
2½ x 2 x ¼	3/8	6	3/16	6

Note ①
¼" for ⊥L ≤ to ¾" thick
5/16" for ⊥L > than ¾" thick

See 7-B7 for truss elevations

Member size	Diagonal			
	Weld #3	L_3	Weld #4	L_4
1¾ x 1¼ x ¼	¼	4	3/16	4
2 x 1½ x ¼	5/16	5	3/16	5
2½ x 1½ x ¼	5/16	6	3/16	5
2½ x 2 x ¼	5/16	6	3/16	5
2½ x 2 x 5/16	5/16	6	¼	5
3 x 2 x ¼	5/16	7	3/16	5
3 x 2 x 7/16	5/16	9	5/16	6
3 x 2 x ½	7/16	9	5/16	6
3 x 2½ x ½	7/16	9	5/16	6

LICENSED PROFESSIONAL ENGINEER — LESLIE E. ROBERTSON — No. 34360 — UNIVERSITY OF THE STATE OF NEW YORK

DESIGNED K. Hwang
DRAWN J. Gricius
REVIEWED W. Brewer

7-B8-5.1

SKILLING, HELLE, CHRISTIANSEN, ROBERTSON — Structural & Civil Engineers

PROJECT: THE WORLD TRADE CENTER | TITLE: FLOOR TRUSS DETAIL 5.2 | DATE: 3-19-69

REVISIONS

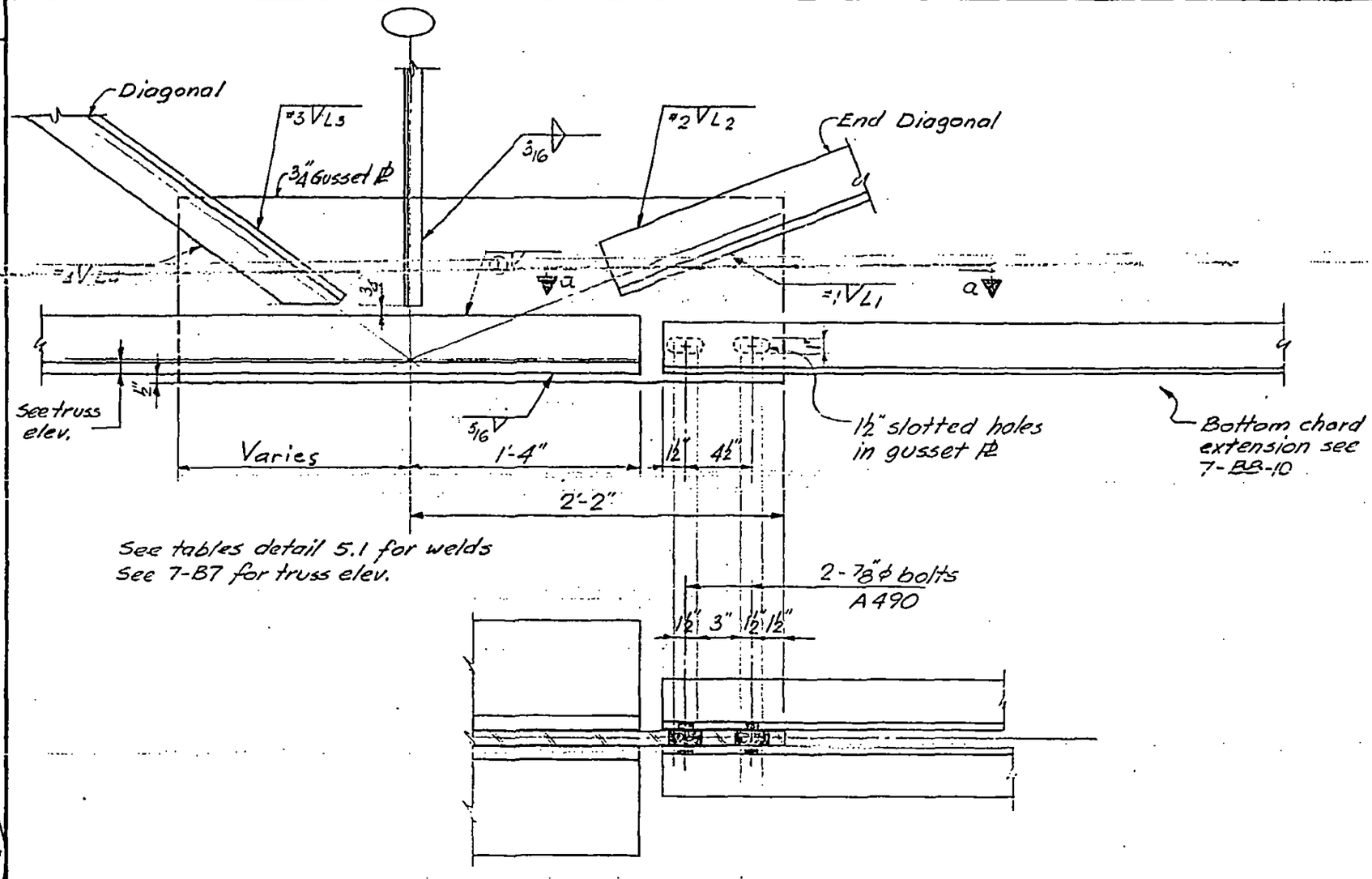

See tables detail 5.1 for welds
See 7-B7 for truss elev.

Section a-a

LICENSED PROFESSIONAL ENGINEER — LESLIE E. ROBERTSON — No. 34360 — UNIVERSITY OF THE STATE OF NEW YORK

DESIGNED K. Bwang
DRAWN J. Gricius
REVIEWED W. Brewer

7-B8-5.2

SKILLING, HELLE, CHRISTIANSEN, ROBERTSON — Structural & Civil Engineers

PROJECT: THE WORLD TRADE CENTER | TITLE: FLOOR TRUSS DETAIL 5.3 | DATE: 3-19-69

REVISIONS

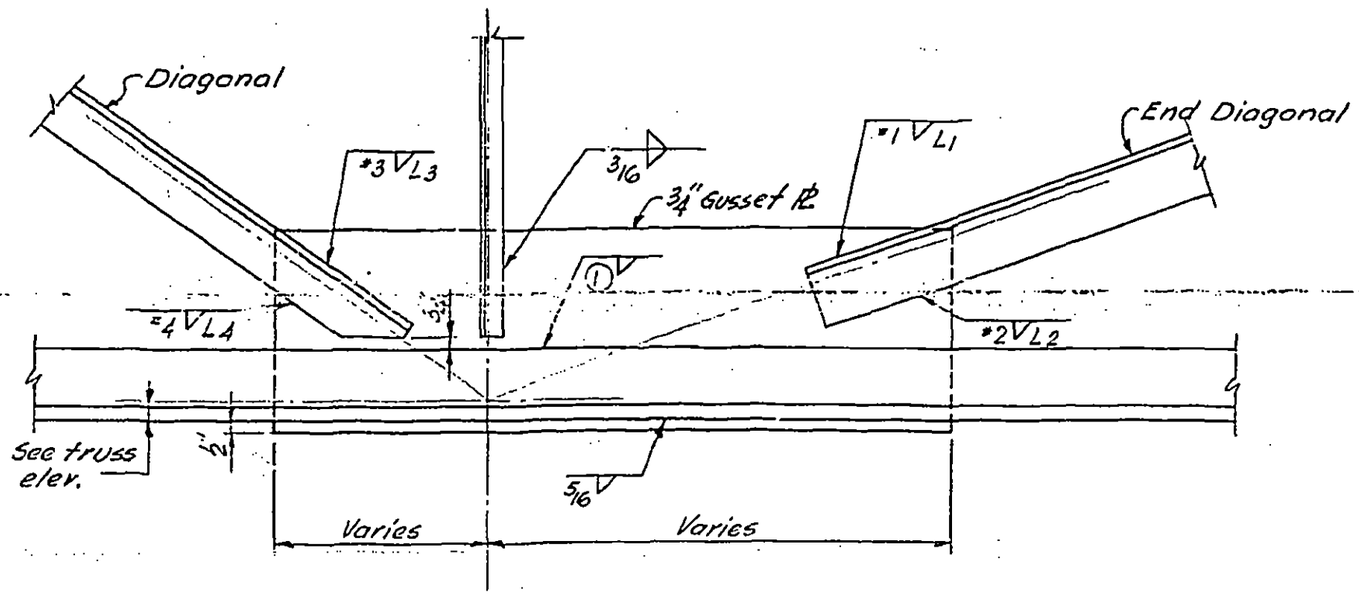

See table Det. 5.1 for welds
See 7-B7 for truss elev.

LICENSED PROFESSIONAL ENGINEER
LESLIE E. ROBERTSON
No. 34360
UNIVERSITY OF THE STATE OF NEW YORK

DESIGNED K. Hwang
DRAWN J. Gricius
REVIEWED W. Brewer

7-B8-5.3

SKILLING, HELLE, CHRISTIANSEN, ROBERTSON — Structural & Civil Engineers

PROJECT THE WORLD TRADE CENTER | TITLE FLOOR TRUSS DETAIL 6.1 | DATE 3-19-69

REVISIONS

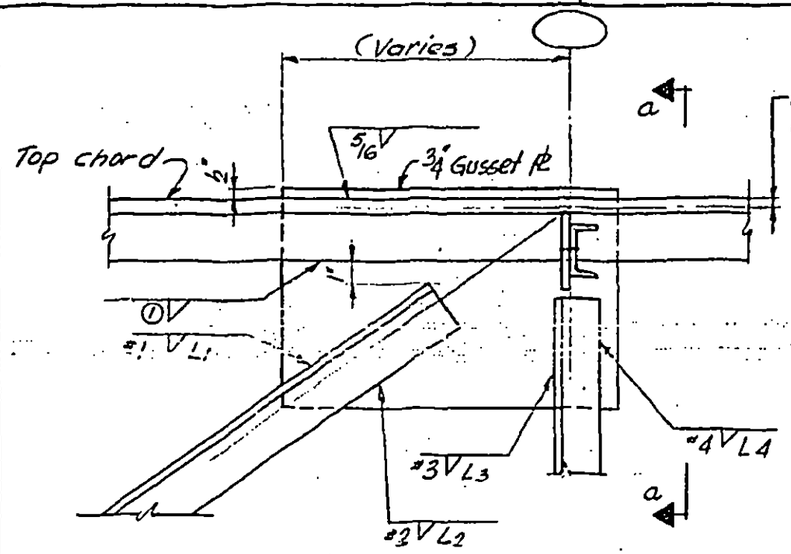

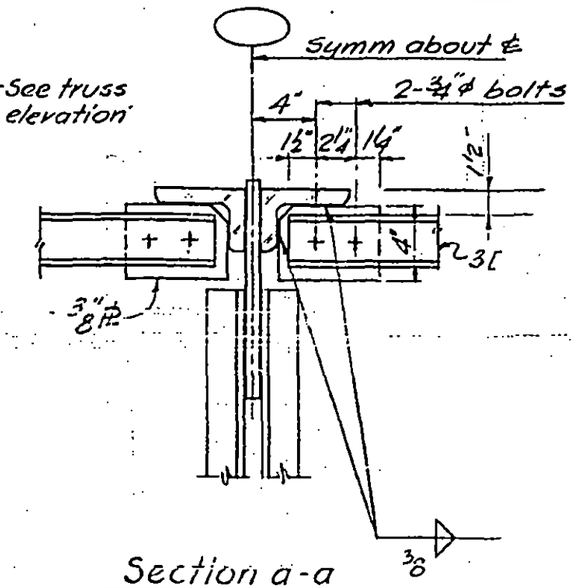

Section a-a

Note ①
¼" for tr ≤ to ¾" thick
⅝" for tr > ¾" thick
See 7-B7 for truss elevation

Member size	Diagonal			
	Weld #1	L_1	Weld #2	L_2
1¾ × 1¾ × ¼	5/16	6	3/16	4
2½ × 1½ × ¼	¼	7	3/16	5
2½ × 2 × ¼	5/16	7	3/16	5
1¼ × 1¼ × ¼	¼	6	3/16	4
1 × 1 × ¼	¼	6	3/16	4

Member size	Vertical				
	Weld #3	L_3	Weld #4	L_4	Weld #5
1¾ × 1¼ × ¼	¼	4	5/16	4	—
2½ × 1½ × ¼	5/16	5	3/16	5	—
2½ × 2 × 5/16	7/16	5	¼	5	—
2½ × 2 × 3/8	½	5	¼	5	—
2½ × 2 × ¼	7/16	5	3/16	5	
1¼ × 1¼ × ¼	3/16	5	3/16	5	

LICENSED PROFESSIONAL ENGINEER — LESLIE E. ROBERTSON — No. 34360 — UNIVERSITY OF THE STATE OF NEW YORK

DESIGNED K. Hwang
DRAWN A.L. FRANQUI
REVIEWED W. Brewer

7-B8-6.1

SKILLING, HELLE, CHRISTIANSEN, ROBERTSON — Structural & Civil Engineers

PROJECT: THE WORLD TRADE CENTER | TITLE: FLOOR TRUSS DETAIL 6.2 & 6.3 | DATE: 3-19-69

REVISIONS

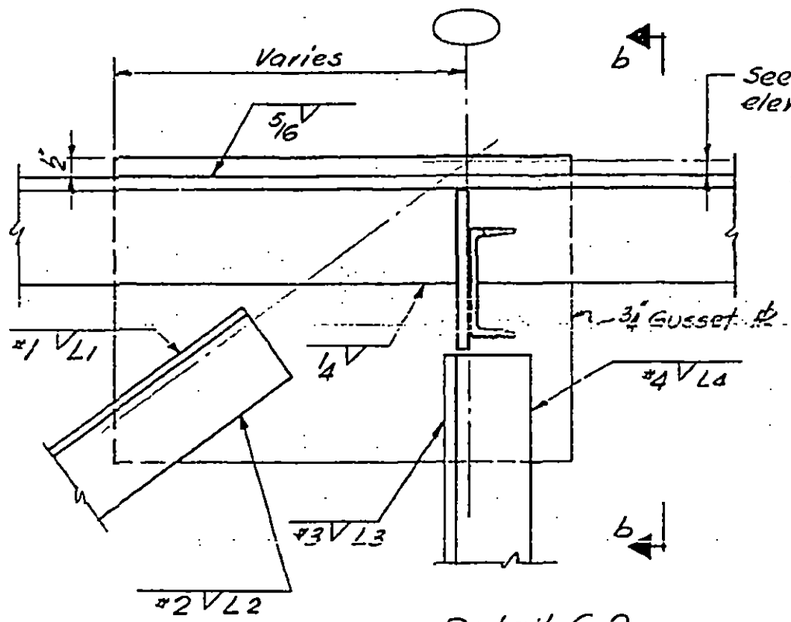

Detail 6.2

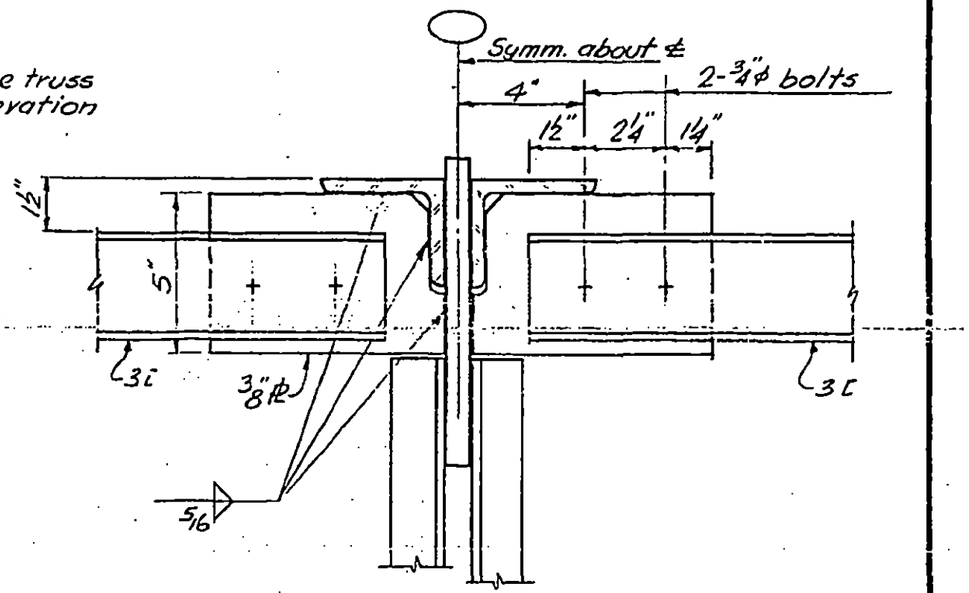

Section b-b

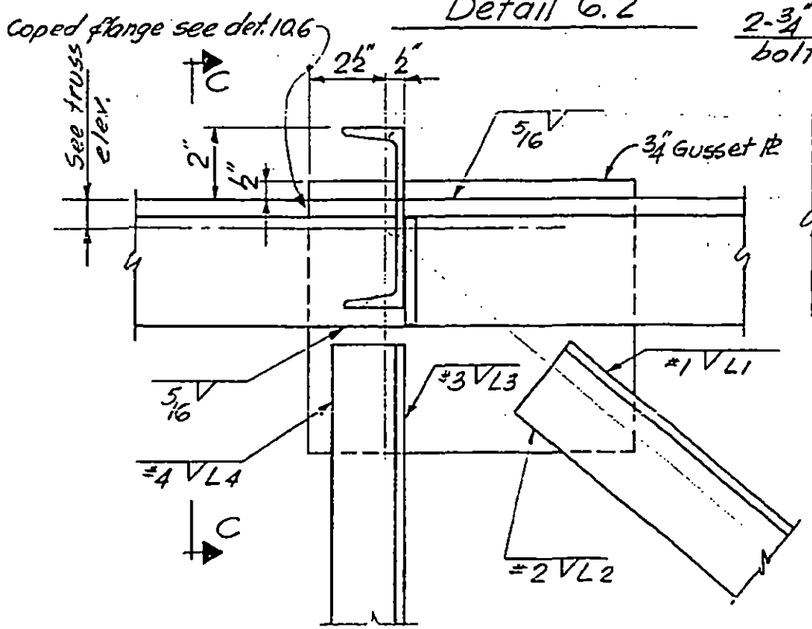

Detail 6.3

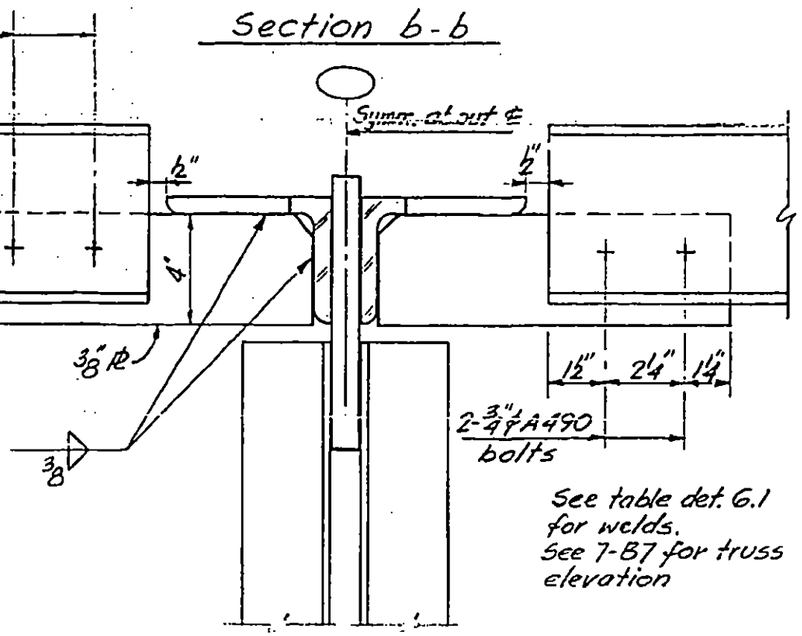

Section c-c

See table det. 6.1 for welds.
See 7-B7 for truss elevation

LICENSED PROFESSIONAL ENGINEER
LESLIE E. ROBERTSON
No. 34360
UNIVERSITY OF THE STATE OF NEW YORK

DESIGNED K. Hwang
DRAWN J. Gricius
REVIEWED W. Brewer

R

7-B8-6.2

SKILLING, HELLE, CHRISTIANSEN, ROBERTSON — Structural & Civil Engineers

PROJECT: THE WORLD TRADE CENTER | TITLE: FLOOR TRUSS DETAIL 7.1 7.3 7.5 | DATE: 3-19-69

REVISIONS

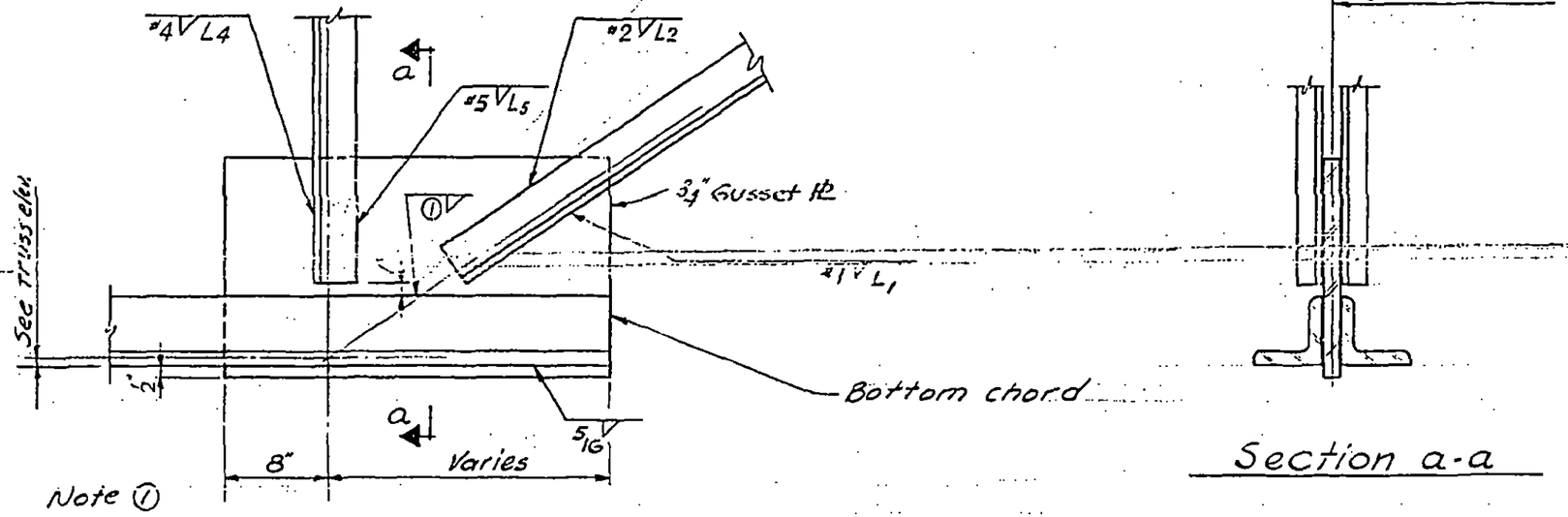

Note ①
1/4" for 7r ≤ to 3/4" thick
5/8" for 7r > 3/4" thick
See 7-B7 for truss elevation.

Section a-a

Member size	Diagonal				Detail
	Weld #1	L1	Weld #2	L2	
1¼ × 1¼ × ¼	¼	6	3/16	4	7.5
1¾ × 1¾ × ¼	5/16	6	3/16	4	7.3 & 7.5
2½ × 1½ × 5/16	3/8	6	¼	5	7.3
2½ × 2 × ¼	3/8	6	3/16	5	7.1
2½ × 2 × 5/16	3/8	7	¼	5	7.1
4 × 3½ × ½	11/16	10	7/16	8	7.6

Member size	Vertical				Detail
	Weld #4	L4	Weld #5	L5	
1¼ × 1¼ × ¼	3/16	5	3/16	5	7.5
1¾ × 1¼ × ¼	¼	4	3/16	4	7.1 & 7.5
2½ × 1½ × ¼	5/16	5	3/16	5	7.1
2½ × 2 × ¼	3/8	5	3/16	5	7.3

LICENSED PROFESSIONAL ENGINEER — LESLIE E. ROBERTSON — No. 34360 — UNIVERSITY OF THE STATE OF NEW YORK

DESIGNED K. Hwang

DRAWN A.L. FRANQUI

REVIEWED W. Brewer

7-B8-7.1

SKILLING, HELLE, CHRISTIANSEN, ROBERTSON — Structural & Civil Engineers

PROJECT: THE WORLD TRADE CENTER | TITLE: FLOOR TRUSS DETAIL 7.2 | DATE: 3-19-69

REVISIONS

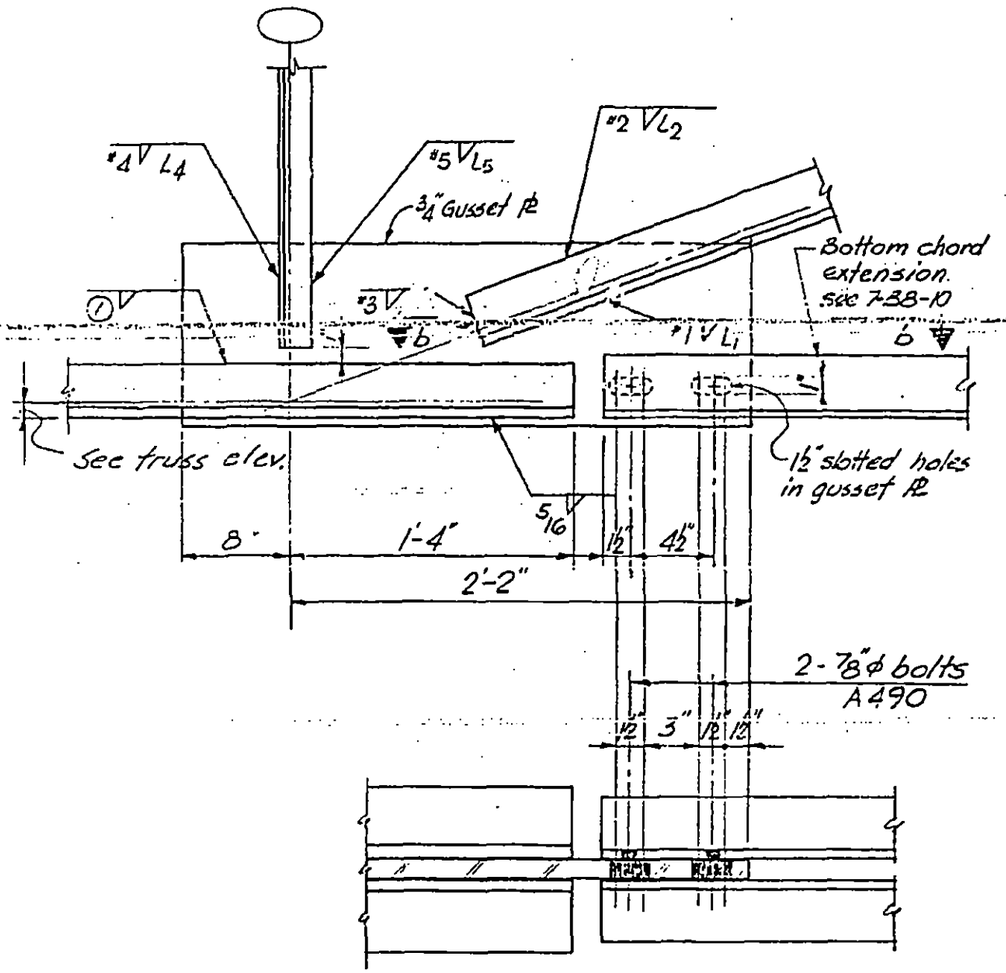

Section b-b

See 7-B7 for truss elev.

Member size	Diagonal				
	Weld #1	L1	Weld #2	L2	Weld #3
2½ × 2 × 5/16	3/8	7	1/4	5	—
2½ × 2 × 3/8	5/16	9	1/4	6	—
3 × 2 × 3/8	3/8	9	5/16	6	—
3 × 2 × ½	3/8	9	5/16	6	7/16
4 × 3 × 5/8	7/16	9	5/16	6	5/16

Member size	Vertical			
	Weld #4	L4	Weld #5	L5
1¼ × 1¼ × ¼	3/16	5	3/16	5
2½ × 1½ × ¼	5/16	5	3/16	5
2½ × 2 × 5/16	7/16	5	1/4	5
2½ × 2 × 3/8	½	5	1/4	5

LICENSED PROFESSIONAL ENGINEER — LESLIE E. ROBERTSON — No. 34360 — UNIVERSITY OF THE STATE OF NEW YORK

DESIGNED K. Hwang

DRAWN J. Gricius

REVIEWED W. Brewer

7-B8-7.2

SKILLING, HELLE, CHRISTIANSEN, ROBERTSON — Structural & Civil Engineers

PROJECT: THE WORLD TRADE CENTER | TITLE: FLOOR TRUSS DETAIL 7.4 | DATE: 3-19-69

REVISIONS

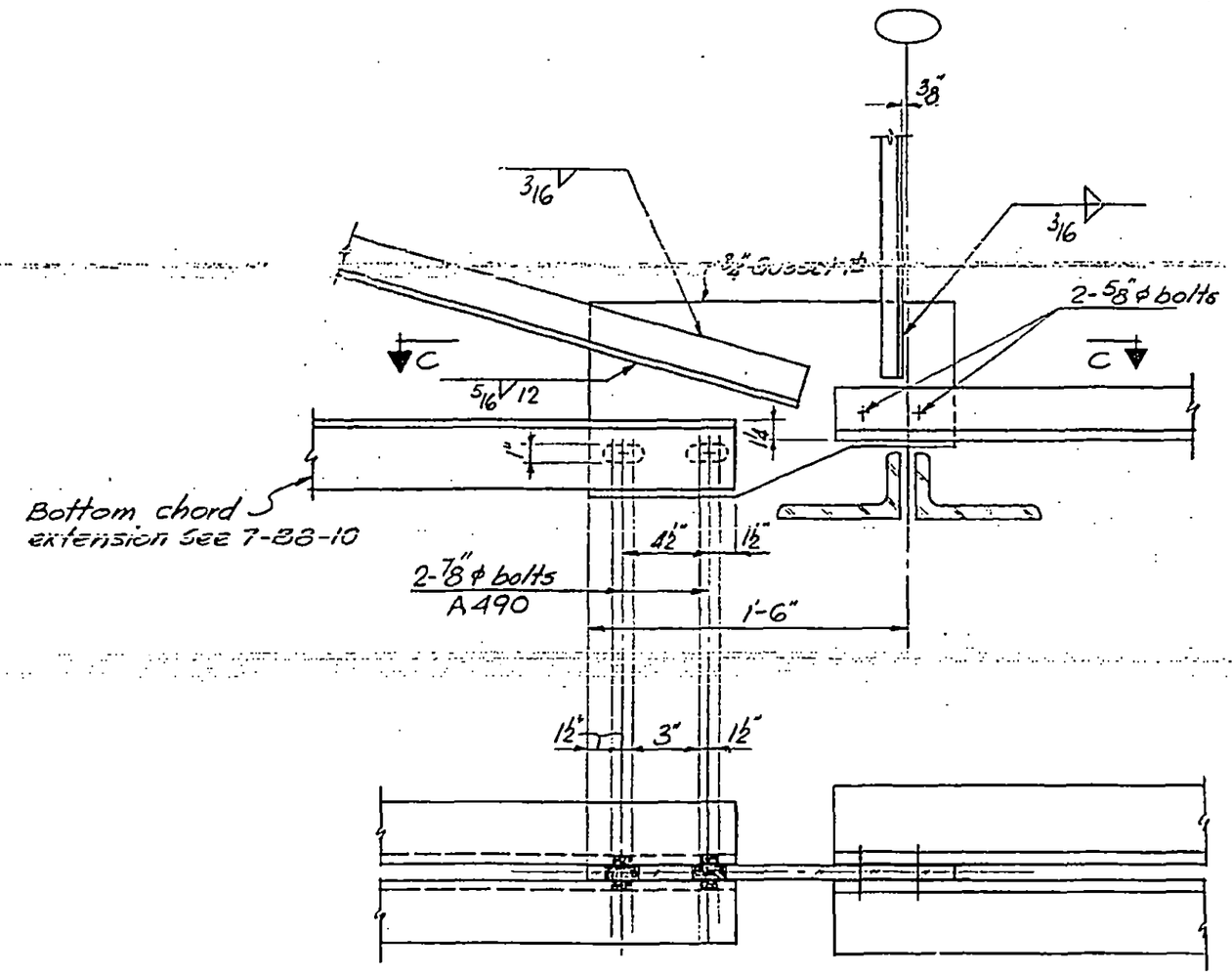

Section C-C

See 7-87 for truss elevation.

LICENSED PROFESSIONAL ENGINEER
LESLIE E. ROBERTSON
No. 34360
UNIVERSITY OF THE STATE OF NEW YORK

DESIGNED K. Hwang
DRAWN J. Gricius
REVIEWED W. Brewer

7-88-7.3

SKILLING, HELLE, CHRISTIANSEN, ROBERTSON — Structural & Civil Engineers

PROJECT: THE WORLD TRADE CENTER | TITLE: FLOOR TRUSS DETAIL 8.1 | DATE: 3-19-69

REVISIONS

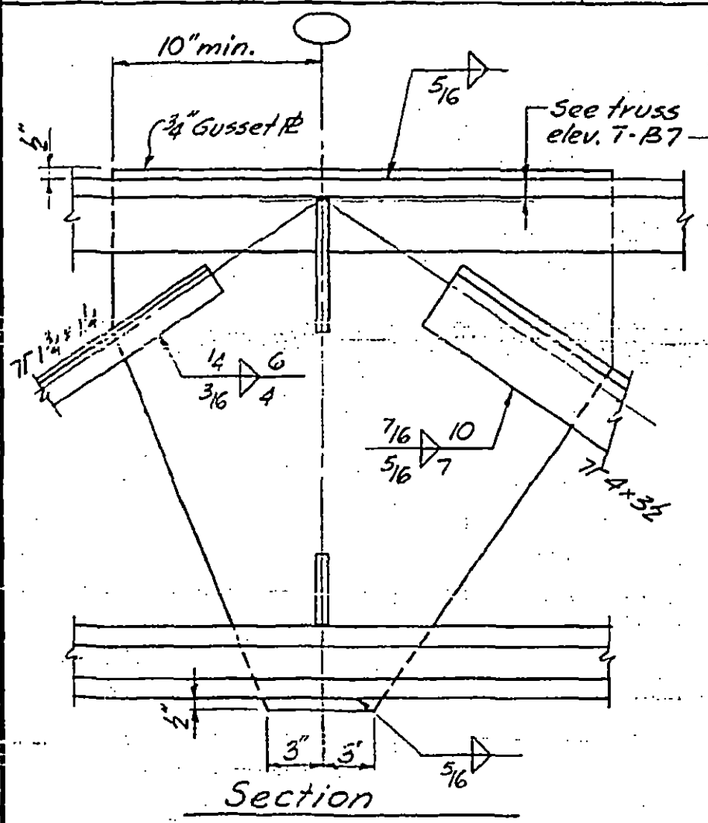

Section

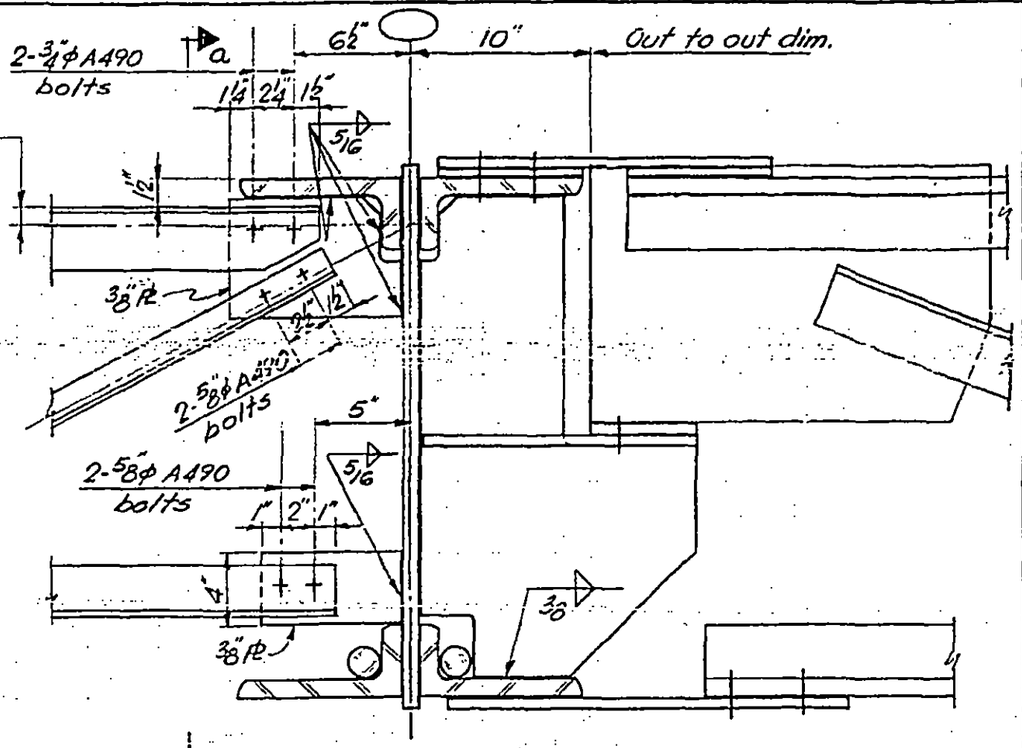

DETAIL 8.1 same as Section A-A (7-B8-8.10) except as shown

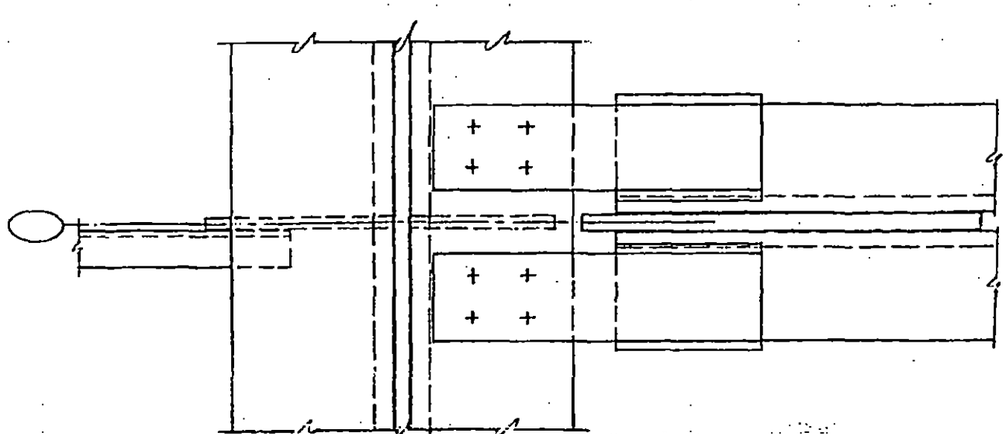

Plan same as section B-B (7-B8-8.10) except as shown

LICENSED PROFESSIONAL ENGINEER — LESLIE E. ROBERTSON — No. 34360 — UNIVERSITY OF THE STATE OF NEW YORK

DESIGNED K. Hwang

DRAWN J. Gricius

REVIEWED W. Brewer

7-B8-8.1

SKILLING, HELLE, CHRISTIANSEN, ROBERTSON — Structural & Civil Engineers

PROJECT: THE WORLD TRADE CENTER | TITLE: FLOOR TRUSS DETAIL 8.2 | DATE: 3-19-69

REVISIONS

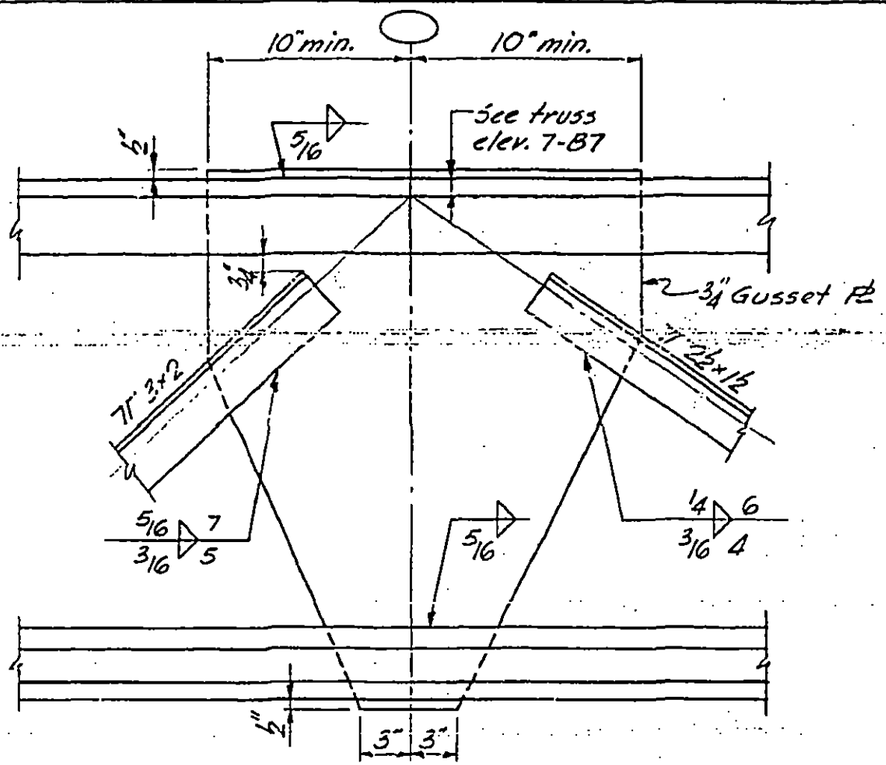

Section b-b

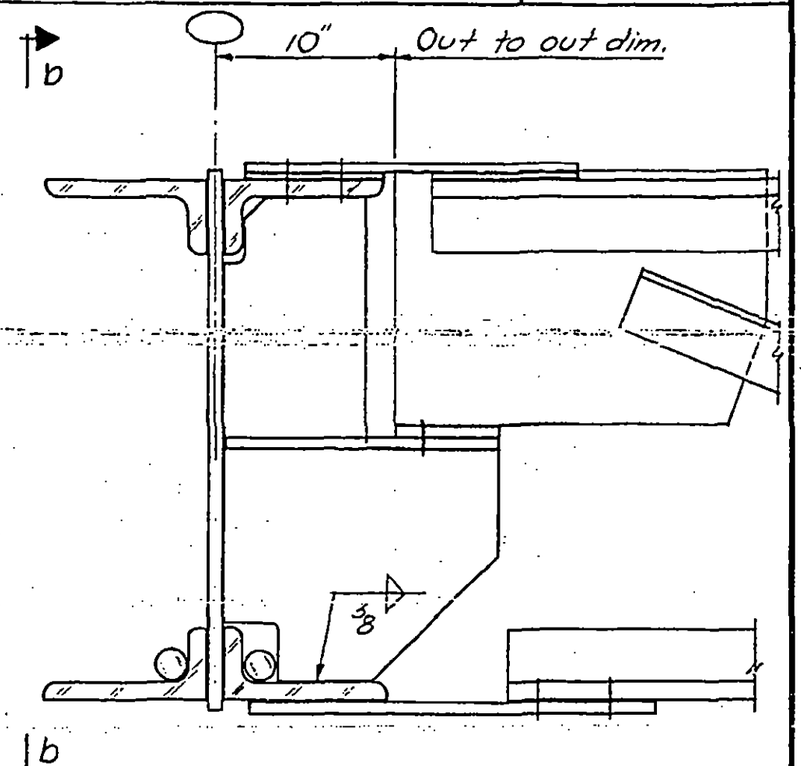

DETAIL 8.2 same as Section A-A (7-88-8.10) except as shown

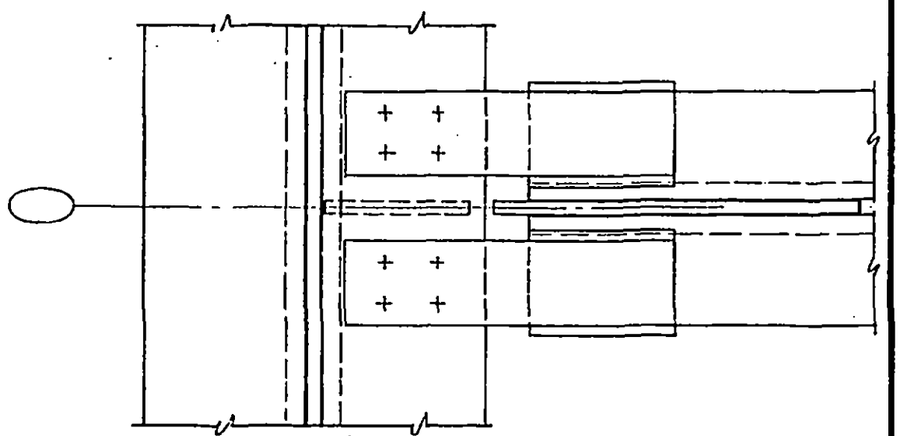

Plan same as section B-B (7-88-8.10) except as shown

LICENSED PROFESSIONAL ENGINEER
LESLIE E. ROBERTSON
No. 34360
UNIVERSITY OF THE STATE OF NEW YORK

DESIGNED K. Hwang
DRAWN J. Gricius
REVIEWED W. Brewer

7-88-8.2

SKILLING, HELLE, CHRISTIANSEN, ROBERTSON — Structural & Civil Engineers

PROJECT: THE WORLD TRADE CENTER | TITLE: FLOOR TRUSS DETAIL 8.3 | DATE: 3-19-69

REVISIONS

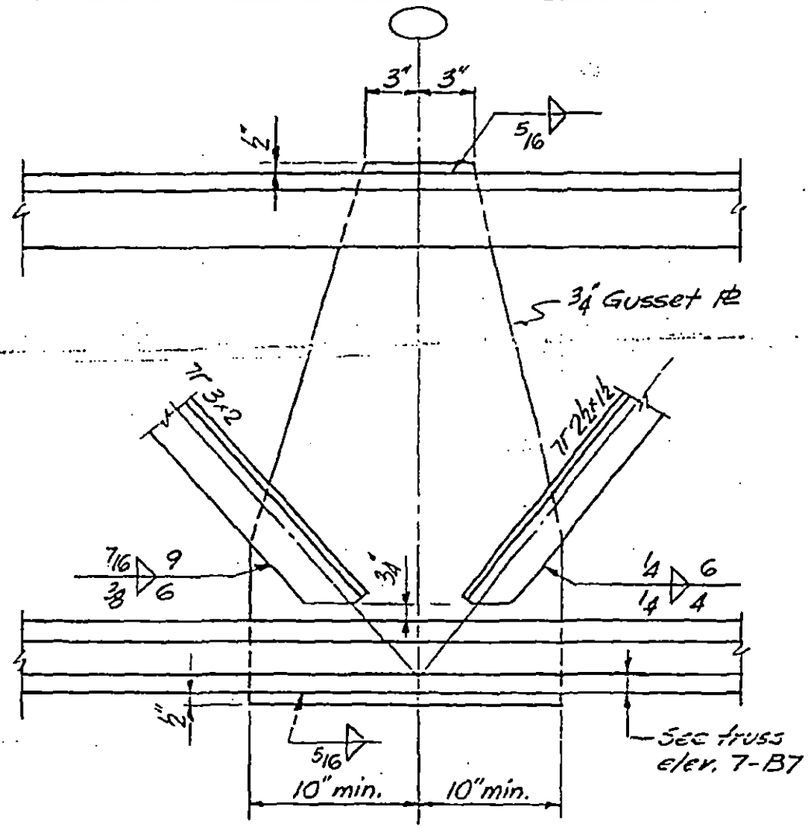

Section c-c

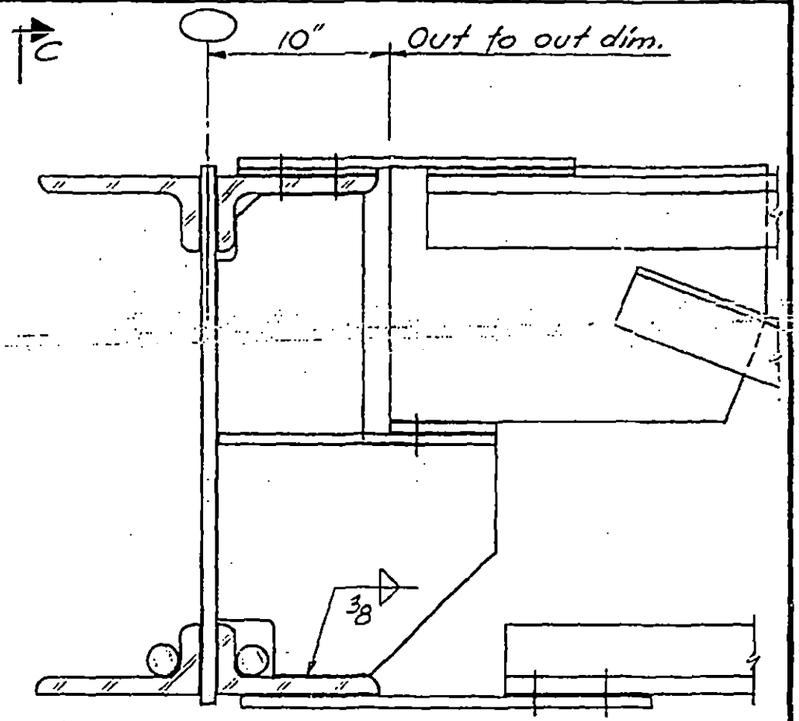

DETAIL 8.3 same as Section A-A (7-B8-8.10) except as shown

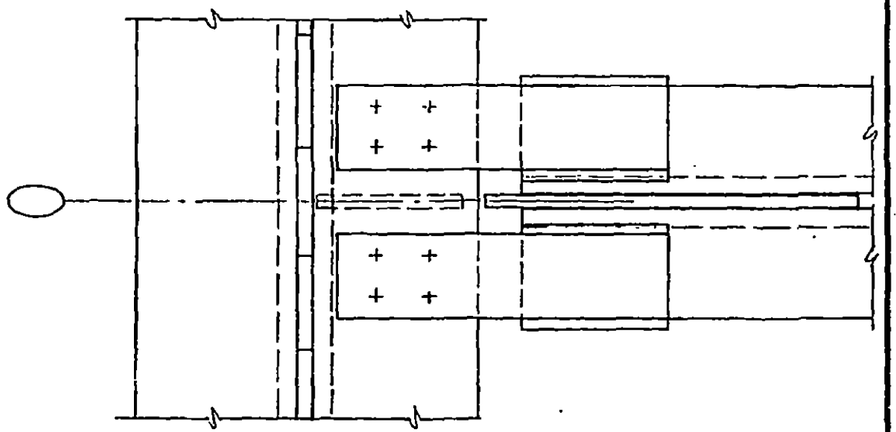

Plan same as section B-B (7-B8-8.10) except as shown

LICENSED PROFESSIONAL ENGINEER — LESLIE E. ROBERTSON — No. 34360 — UNIVERSITY OF THE STATE OF NEW YORK

DESIGNED: K. Hewang
DRAWN: J. Gricius
REVIEWED: W. Brewer

7-B8-8.3

SKILLING, HELLE, CHRISTIANSEN, ROBERTSON — Structural & Civil Engineers

PROJECT: THE WORLD TRADE CENTER | TITLE: FLOOR TRUSS DETAIL 8.4 | DATE: 3-19-69

REVISIONS

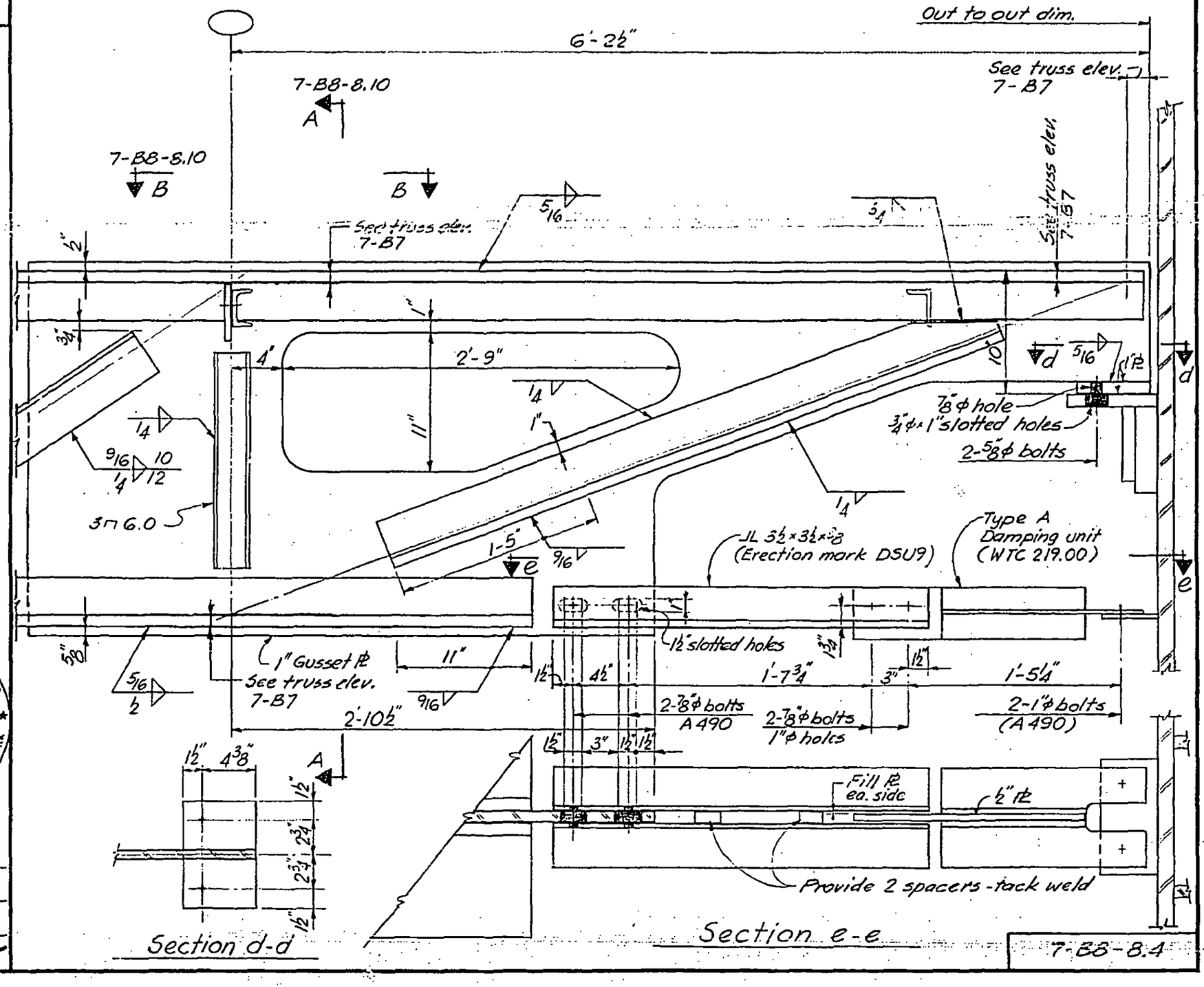

LICENSED PROFESSIONAL ENGINEER — LESLIE E. ROBERTSON — No. 34360 — UNIVERSITY OF THE STATE OF NEW YORK

DESIGNED: K. Ibwang

DRAWN: J. Gricius

REVIEWED: W. Brewer

7-B8-8.4

SKILLING, HELLE, CHRISTIANSEN, ROBERTSON — Structural & Civil Engineers

PROJECT: THE WORLD TRADE CENTER | TITLE: FLOOR TRUSS DETAIL 8.5 | DATE: 3-19-69

REVISIONS

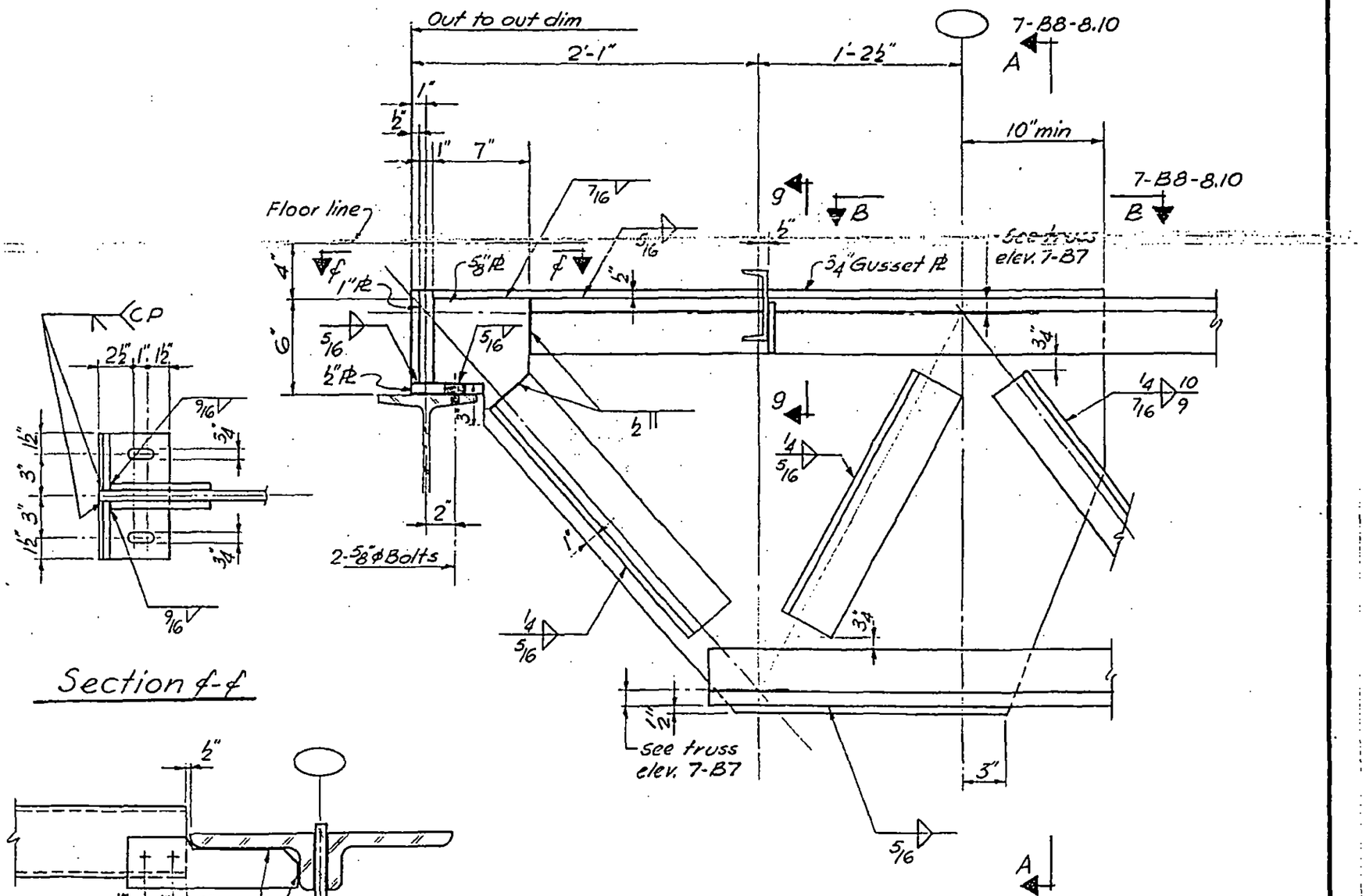

Section f-f

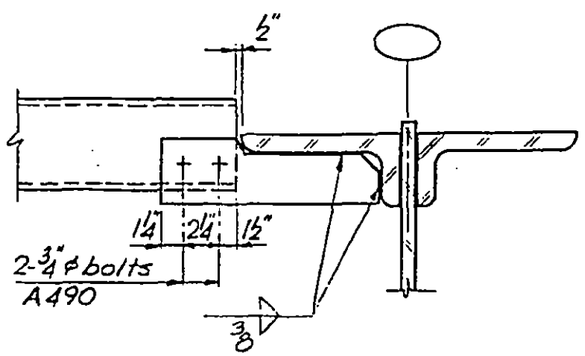

Section 9-9

LICENSED PROFESSIONAL ENGINEER — LESLIE E. ROBERTSON — No. 34360 — UNIVERSITY OF THE STATE OF NEW YORK

DESIGNED K. Hwang

DRAWN J. Gricius

REVIEWED W. Brewer

7-B8-8.5

SKILLING, HELLE, CHRISTIANSEN, ROBERTSON — Structural & Civil Engineers

PROJECT THE WORLD TRADE CENTER | TITLE FLOOR TRUSS DETAIL 8.6 | DATE 3-19-69

REVISIONS

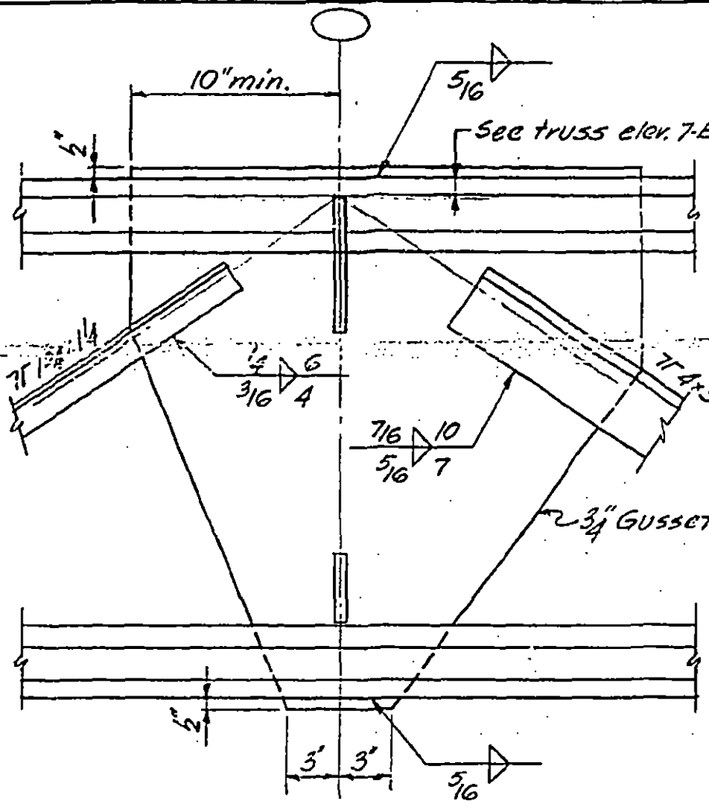

Section h-h

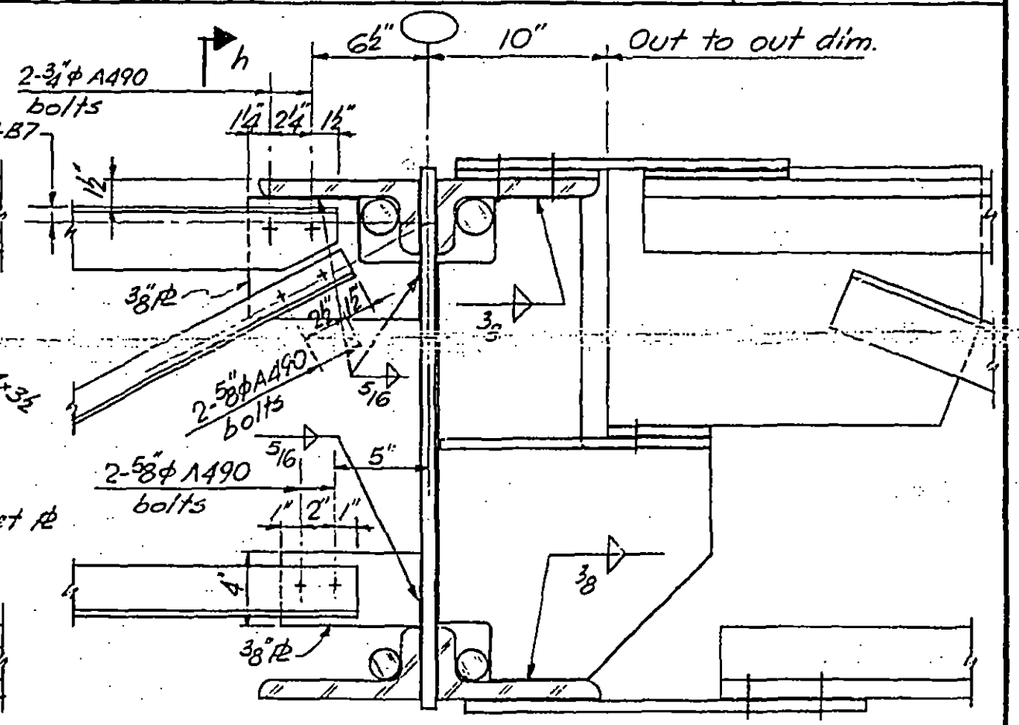

h

DETAIL 8.6 same as Section A-A (7-B8-8.10) except as shown

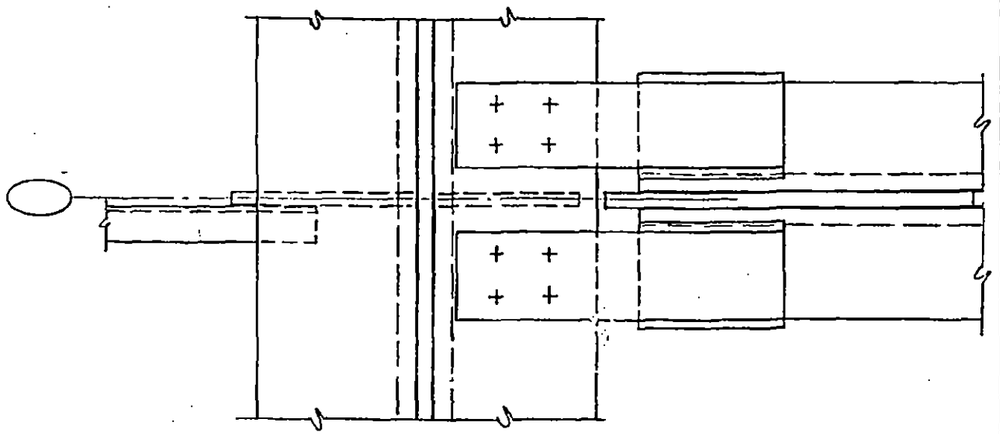

Plan same as section B-B (7-B8-8.10) except as shown

LICENSED PROFESSIONAL ENGINEER — LESLIE E. ROBERTSON — No. 34360 — UNIVERSITY OF THE STATE OF NEW YORK

DESIGNED K. Hwang

DRAWN J. Gricius

REVIEWED W. Brewer

7-B8-8.6

SKILLING, HELLE, CHRISTIANSEN, ROBERTSON — Structural & Civil Engineers

PROJECT: THE WORLD TRADE CENTER | TITLE: FLOOR TRUSS DETAIL 8.7 | DATE: 3-19-69

REVISIONS

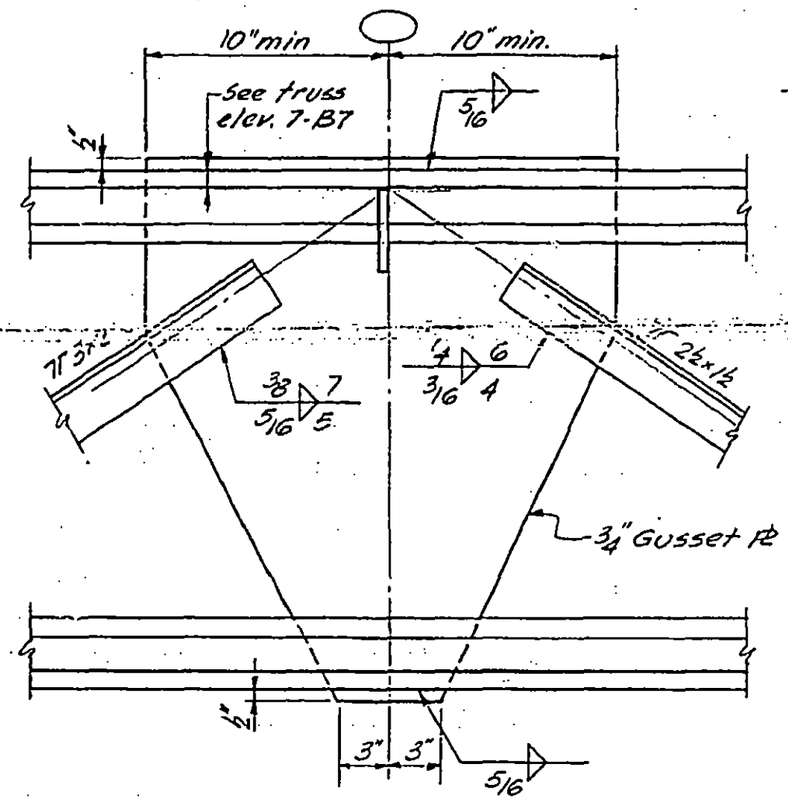

Section j-j

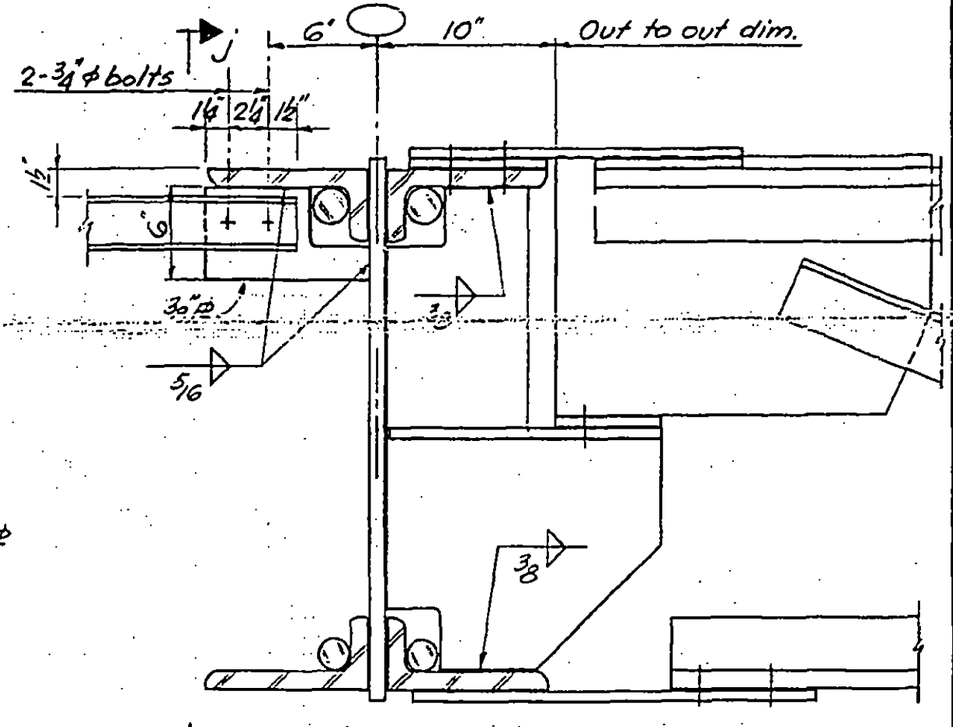

j

DETAIL 8.7 same as Section A-A (7-B8-8.10) except as shown

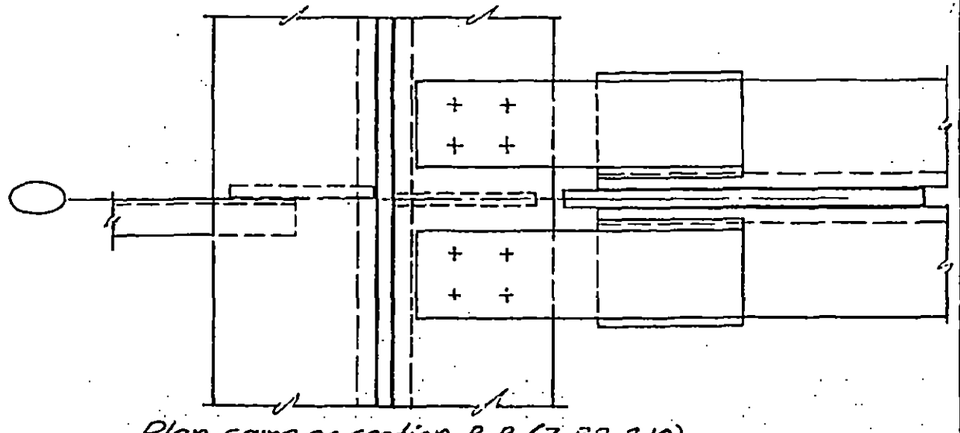

Plan same as section B-B (7-B8-8.10) except as shown

LICENSED PROFESSIONAL ENGINEER — LESLIE E. ROBERTSON — No. 34360 — UNIVERSITY OF THE STATE OF NEW YORK

DESIGNED K. Hwang

DRAWN J. Gricius

REVIEWED W. Brewer

7-B8-8.7

SKILLING, HELLE, CHRISTIANSEN, ROBERTSON — Structural & Civil Engineers

PROJECT: THE WORLD TRADE CENTER | TITLE: FLOOR TRUSS DETAIL 8.8 | DATE: 3-19-69

REVISIONS

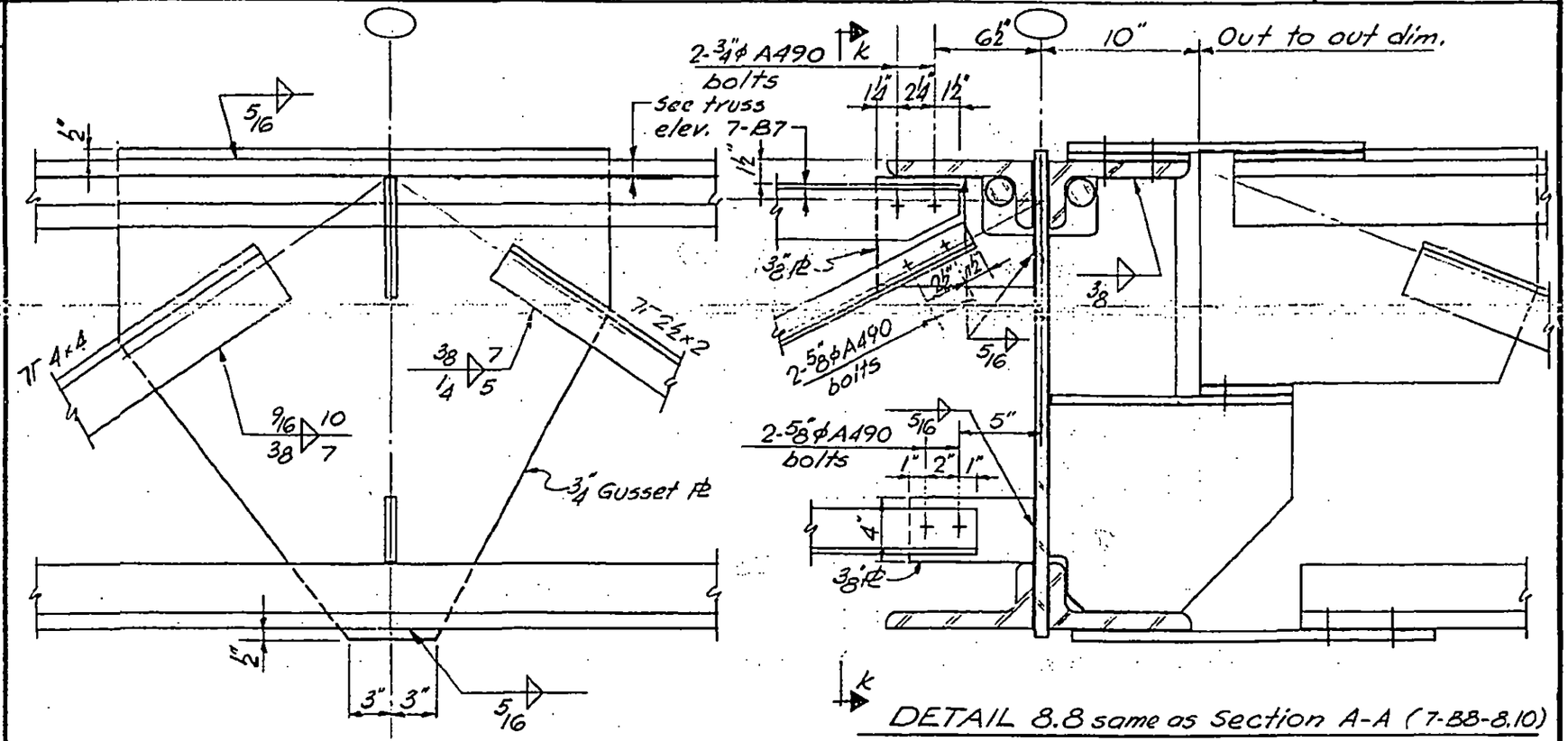

Section k-k

DETAIL 8.8 same as Section A-A (7-B8-8.10) except as shown

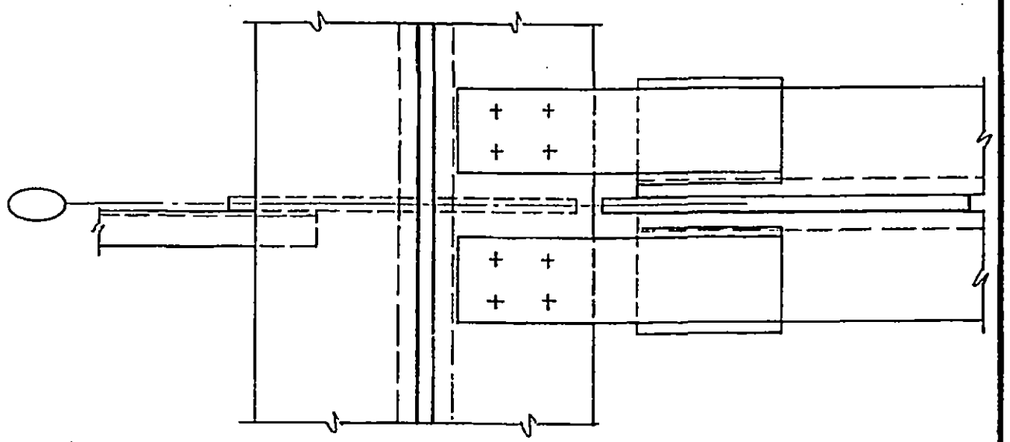

Plan same as section B-B (7-B8-8.10) except as shown

LICENSED PROFESSIONAL ENGINEER — LESLIE E. ROBERTSON — No. 34380 — UNIVERSITY OF THE STATE OF NEW YORK

DESIGNED K. Hwang

DRAWN J. Gricius

REVIEWED W. Brewer

7-B8-8.8

SKILLING, HELLE, CHRISTIANSEN, ROBERTSON — Structural & Civil Engineers

PROJECT: THE WORLD TRADE CENTER | TITLE: FLOOR TRUSS DETAIL 8.9 | DATE: 3-19-69

REVISIONS

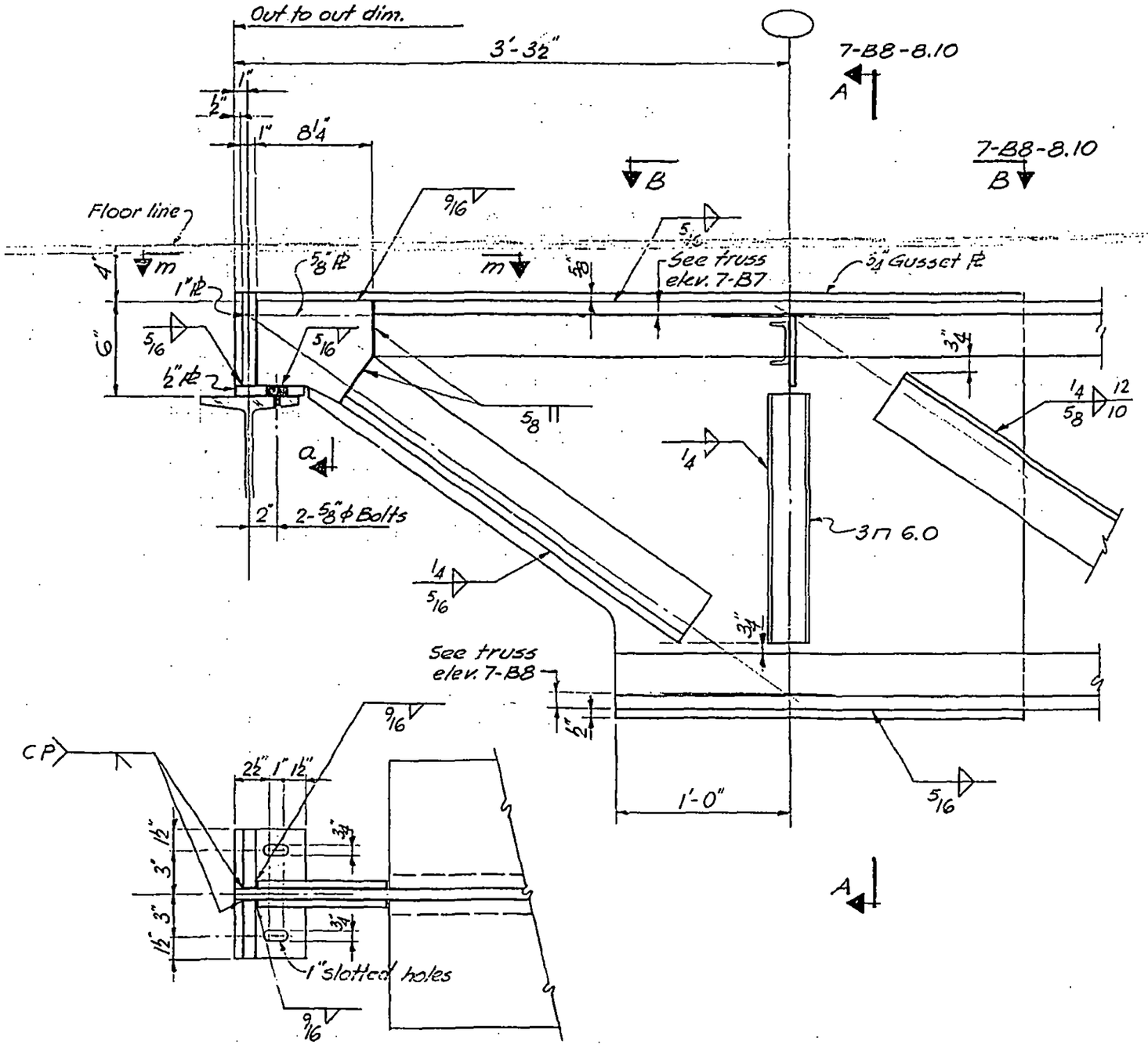

Section m-m

LICENSED PROFESSIONAL ENGINEER — LESLIE E. ROBERTSON — No. 34360 — UNIVERSITY OF THE STATE OF NEW YORK

DESIGNED: K. Shwang

DRAWN: J. Gricius

REVIEWED: W. Brewer

7-B8-8.9

SKILLING, HELLE, CHRISTIANSEN, ROBERTSON — Structural & Civil Engineers

PROJECT: THE WORLD TRADE CENTER

TITLE: FLOOR TRUSS DETAILS - SECTION A-A, B-B

DATE: 3-19-69

REVISIONS

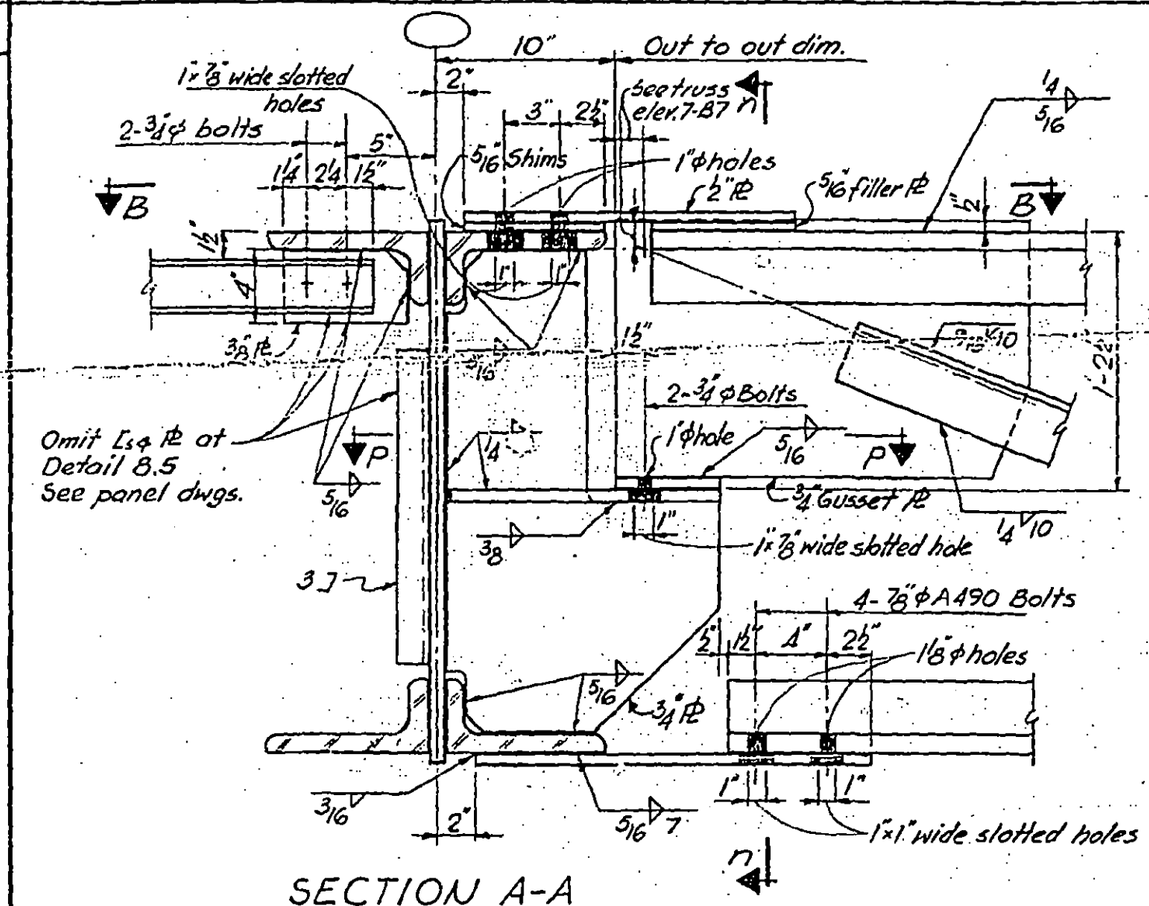

SECTION A-A

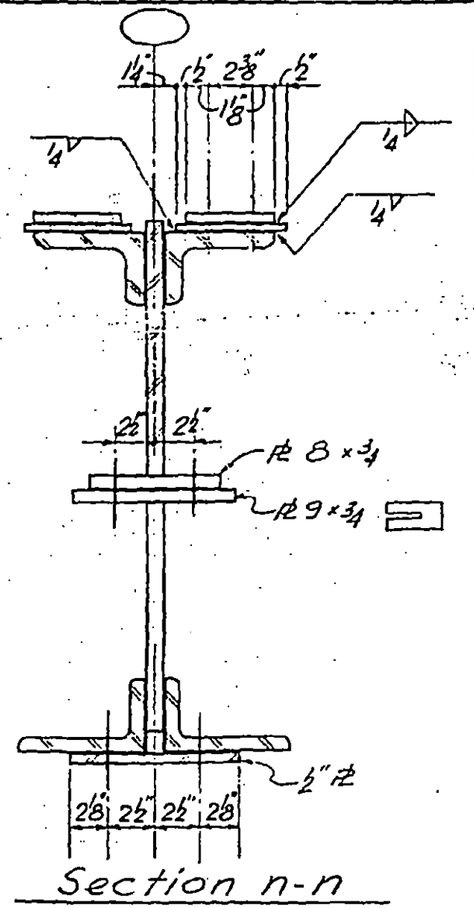

Section n-n

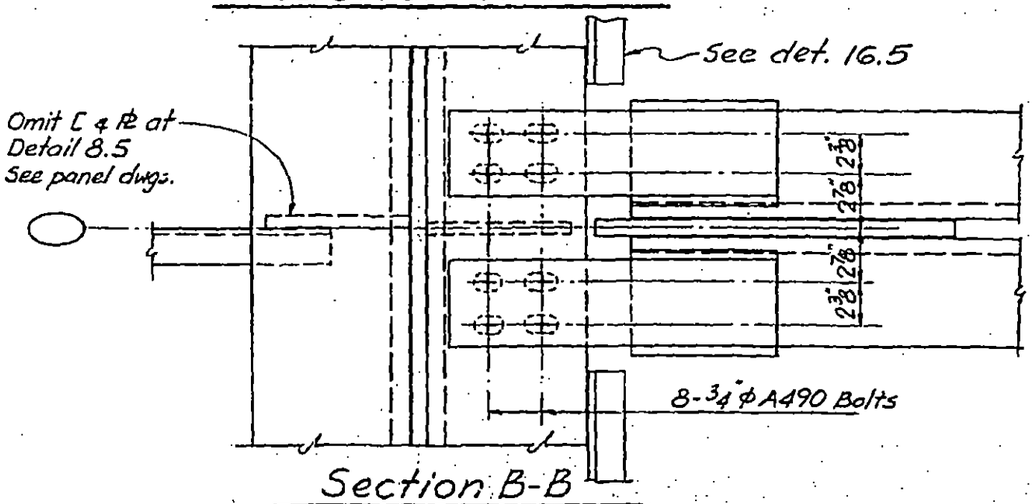

Section B-B

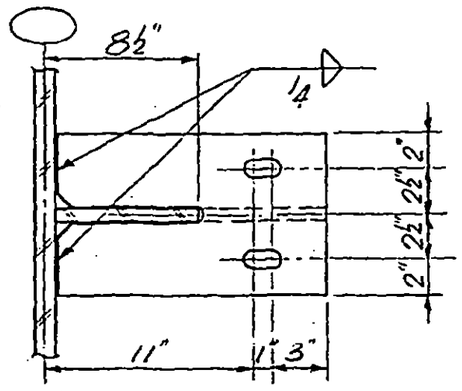

Section D-D

LICENSED PROFESSIONAL ENGINEER — LESLIE E. ROBERTSON — No. 34360 — UNIVERSITY OF THE STATE OF NEW YORK

DESIGNED K. Hewang

DRAWN J. Gricius

REVIEWED W. Brewer

SKILLING, HELLE, CHRISTIANSEN, ROBERTSON — Structural & Civil Engineers

PROJECT: THE WORLD TRADE CENTER | TITLE: FLOOR TRUSS DETAIL 8.10 | DATE: 3-19-69

REVISIONS

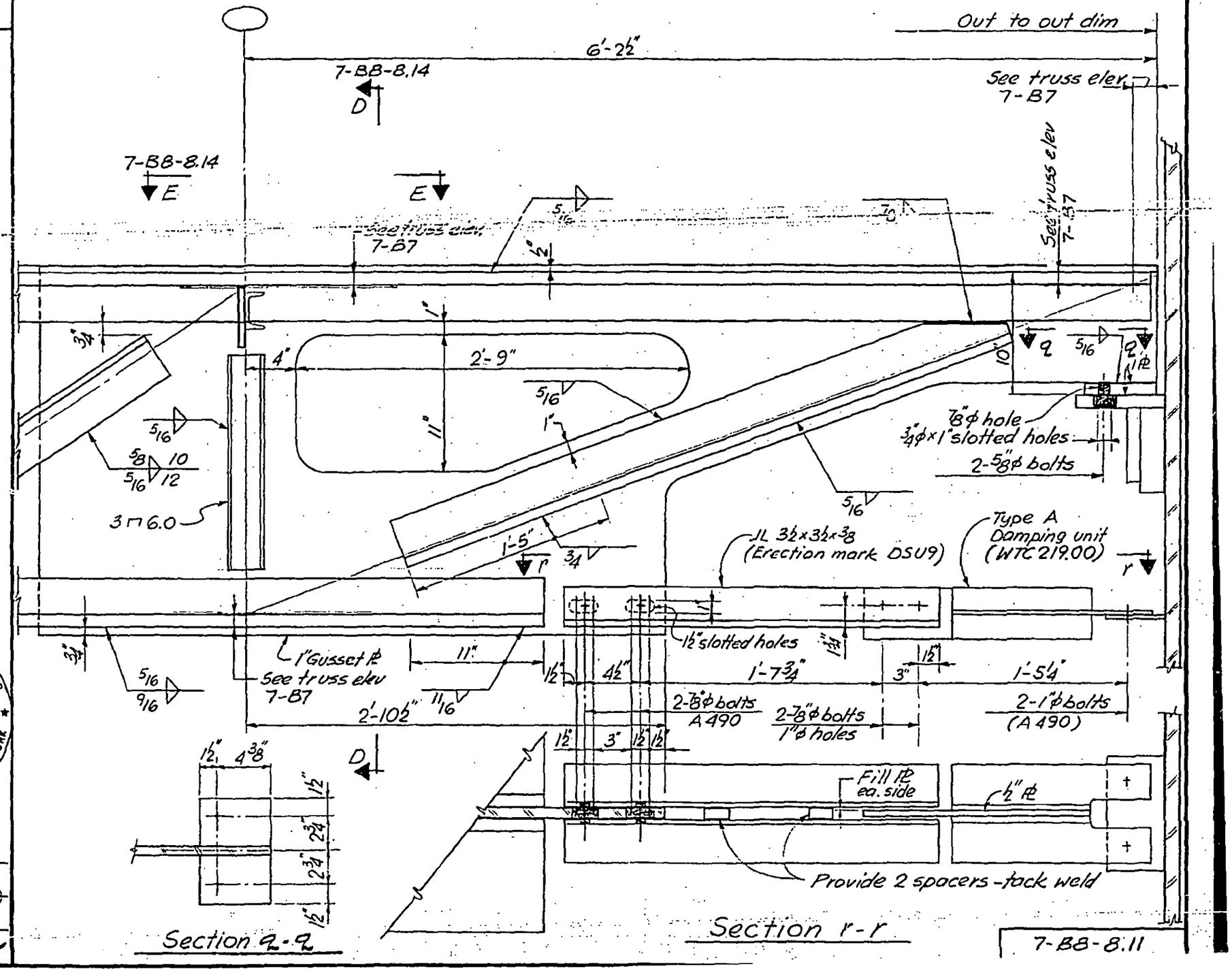

LICENSED PROFESSIONAL ENGINEER
LESLIE E. ROBERTSON
No. 34360
UNIVERSITY OF THE STATE OF NEW YORK

DESIGNED K. Hwang
DRAWN J. Gricius
REVIEWED W. Brocer

SKILLING, HELLE, CHRISTIANSEN, ROBERTSON — Structural & Civil Engineers

PROJECT: THE WORLD TRADE CENTER | TITLE: FLOOR TRUSS DETAIL 8.11 & 8.12 | DATE: 3-19-69

REVISIONS

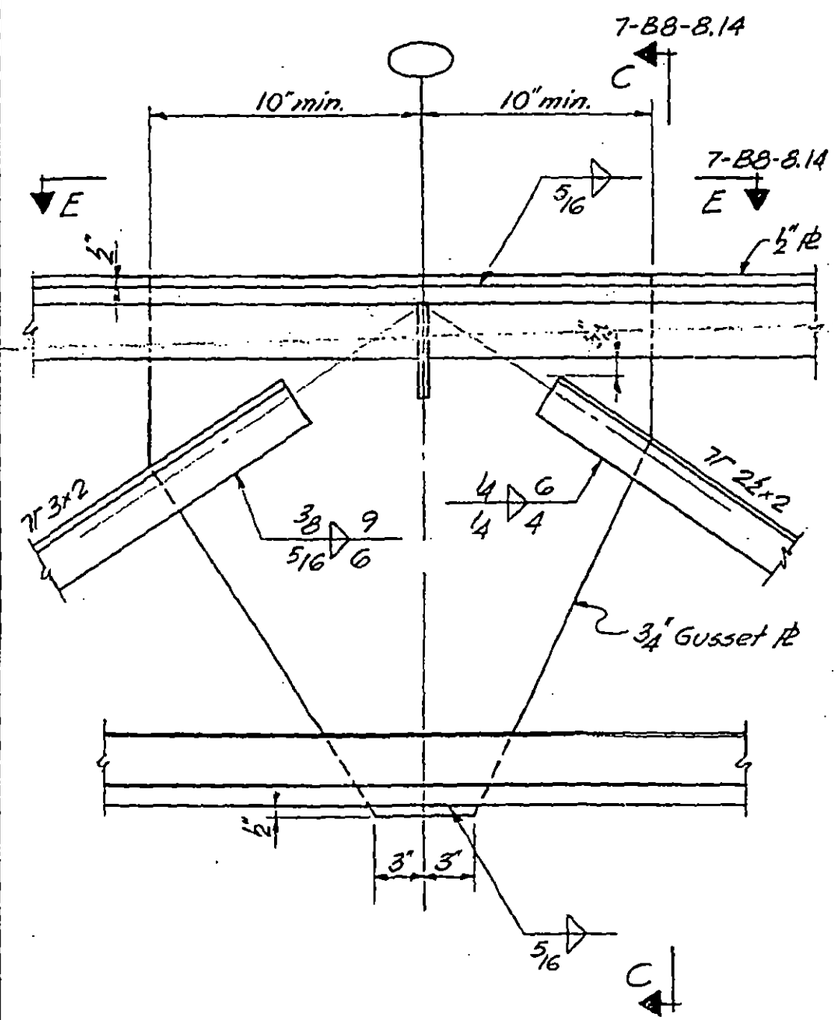

DETAIL 8.12

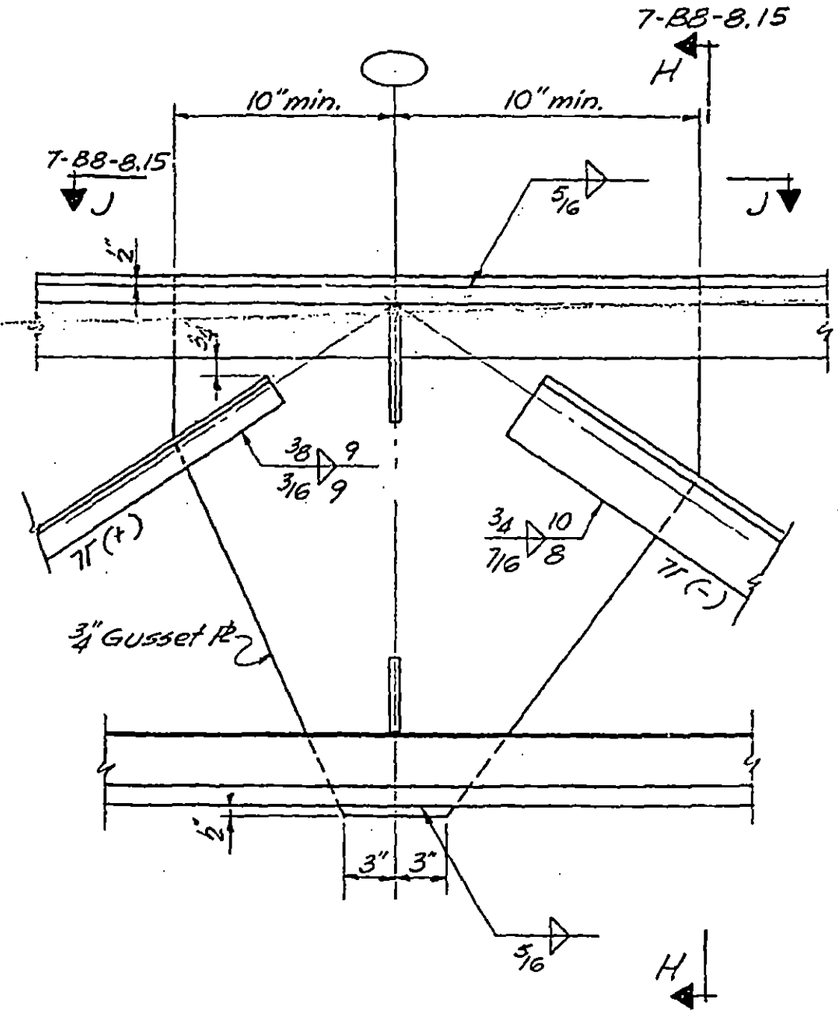

DETAIL 8.11

LICENSED PROFESSIONAL ENGINEER — LESLIE E. ROBERTSON — No. 34360 — UNIVERSITY OF THE STATE OF NEW YORK

DESIGNED K. Hwang

DRAWN J. Gricius

REVIEWED W. Brewer

7-B8-8.12

SKILLING, HELLE, CHRISTIANSEN, ROBERTSON — Structural & Civil Engineers

PROJECT: THE WORLD TRADE CENTER | TITLE: FLOOR TRUSS DETAIL 8.13 | DATE: 3-19-69

REVISIONS

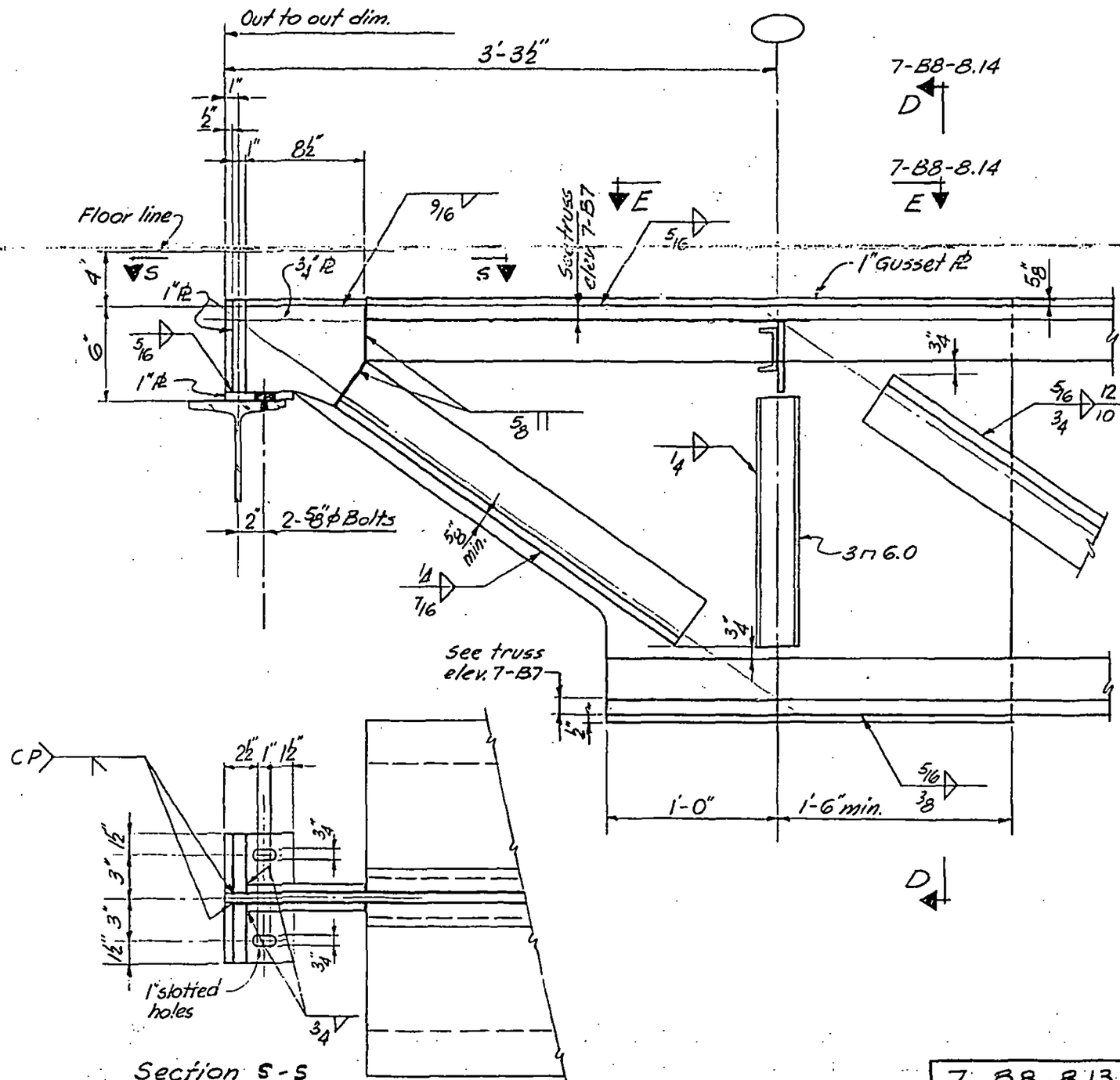

LICENSED PROFESSIONAL ENGINEER — LESLIE E. ROBERTSON — No. 34360 — UNIVERSITY OF THE STATE OF NEW YORK

DESIGNED: K. H. Wang

DRAWN: J. Gricius

REVIEWED: W. Brewer

7-B8-8.13

SKILLING, HELLE, CHRISTIANSEN, ROBERTSON — Structural & Civil Engineers

PROJECT: THE WORLD TRADE CENTER | TITLE: FLOOR TRUSS DETAILS & SECTIONS C-C thru G-G | DATE: 3-19-69

REVISIONS

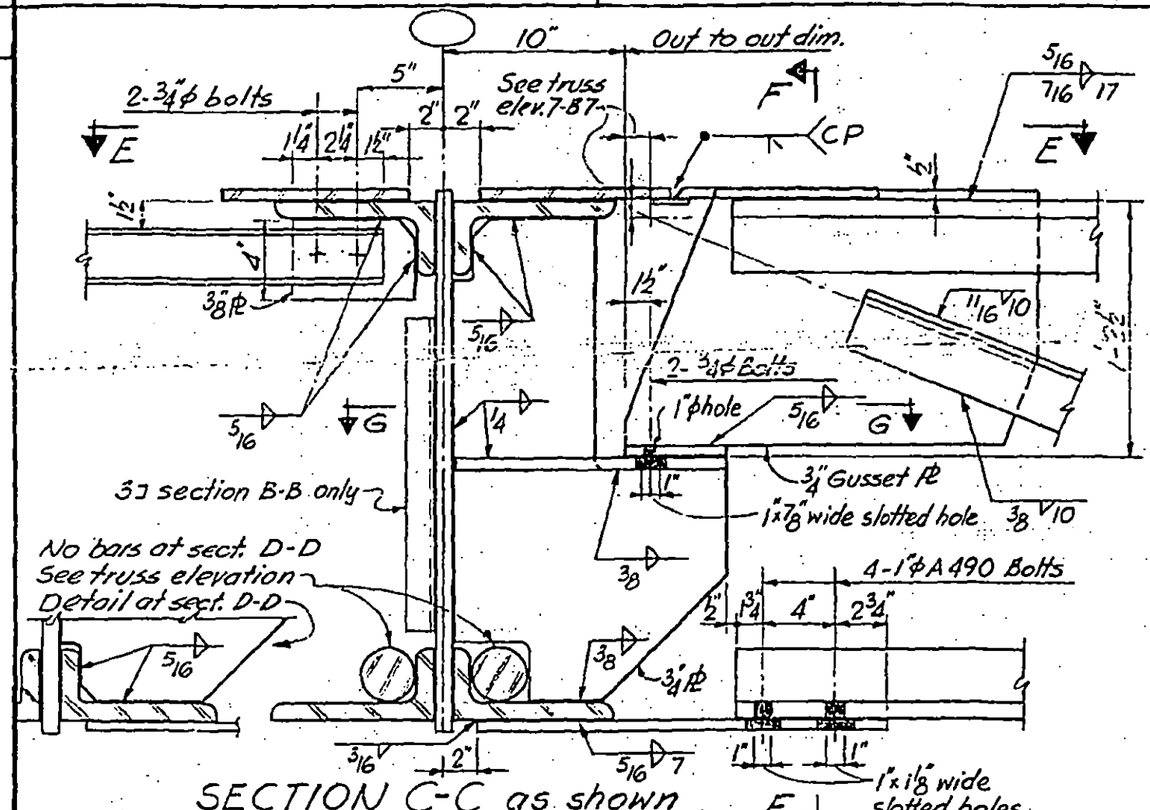

SECTION C-C as shown

SECTION D-D as noted

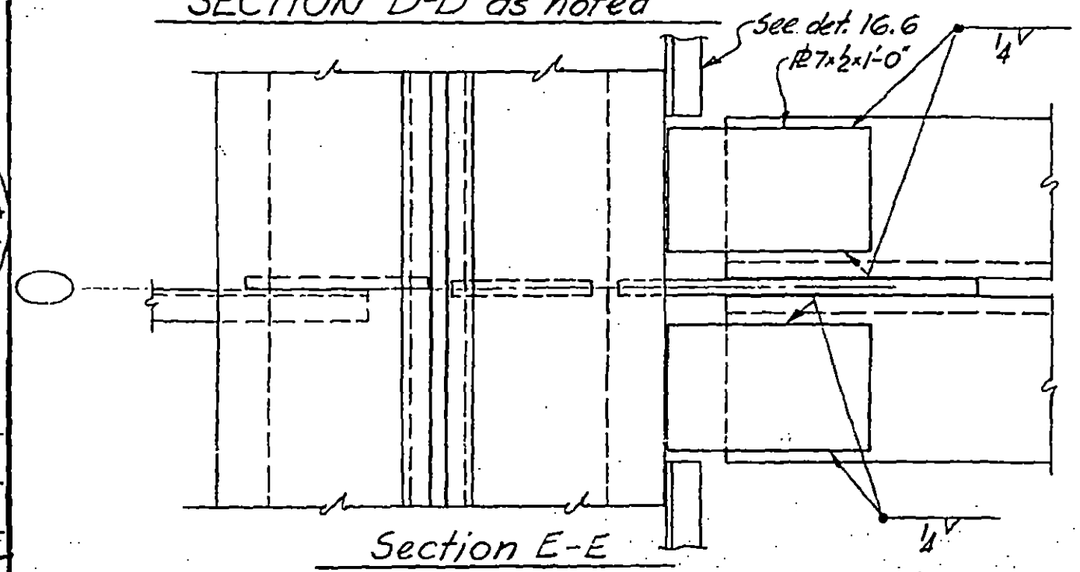

Section E-E

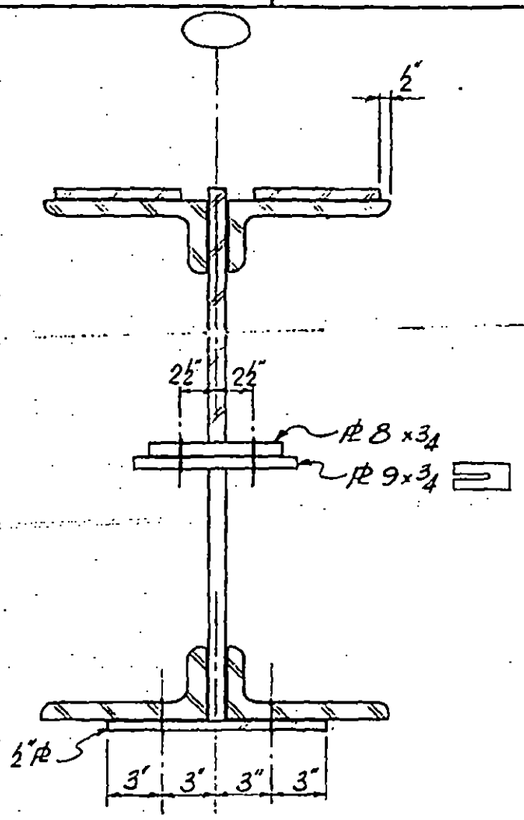

Section F-F

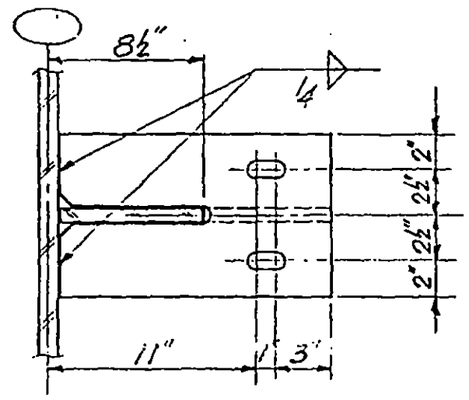

Section G-G

LICENSED PROFESSIONAL ENGINEER — LESLIE E. ROBERTSON — No. 34360 — UNIVERSITY OF THE STATE OF NEW YORK

DESIGNED K. Howang

DRAWN J. Gricius

REVIEWED W. Brewer

7-BB-R 14

SKILLING, HELLE, CHRISTIANSEN, ROBERTSON — Structural & Civil Engineers

PROJECT: THE WORLD TRADE CENTER | TITLE: FLOOR TRUSS DETAIL & SECTIONS H-H, J-J | DATE: 3-19-69

REVISIONS

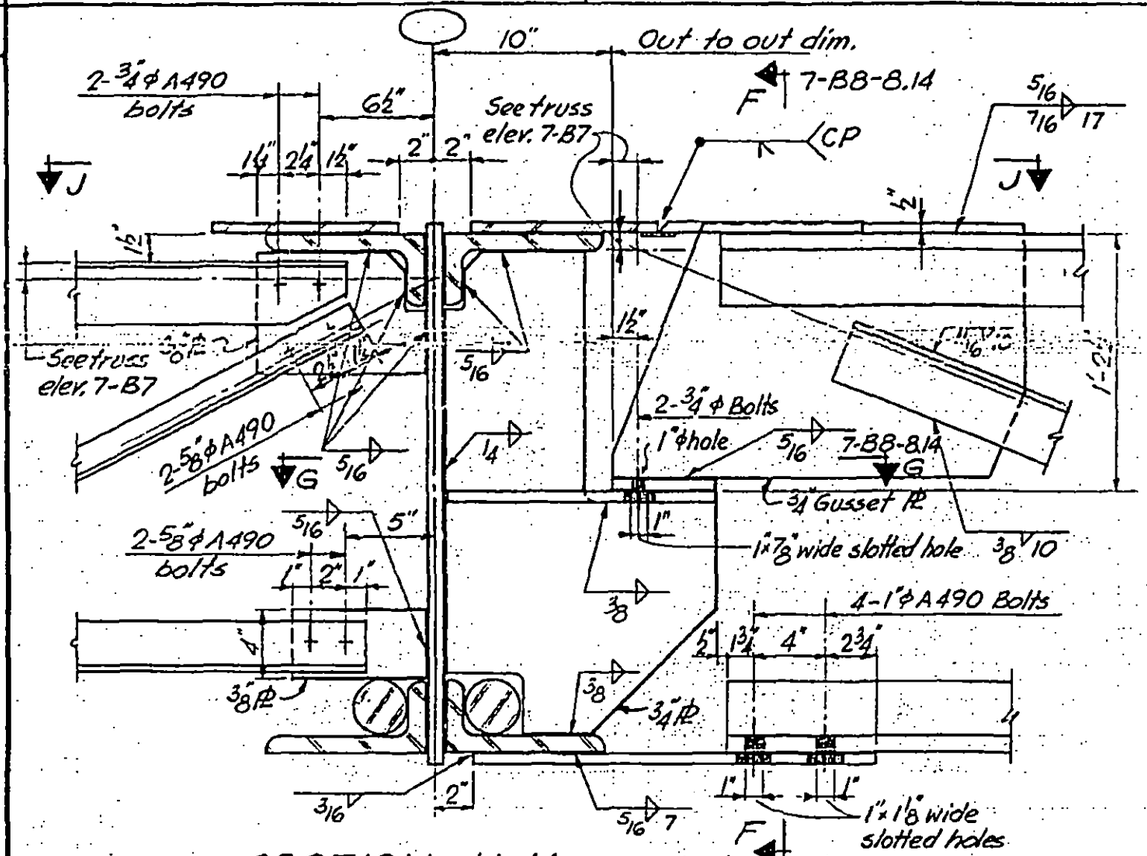

SECTION H H

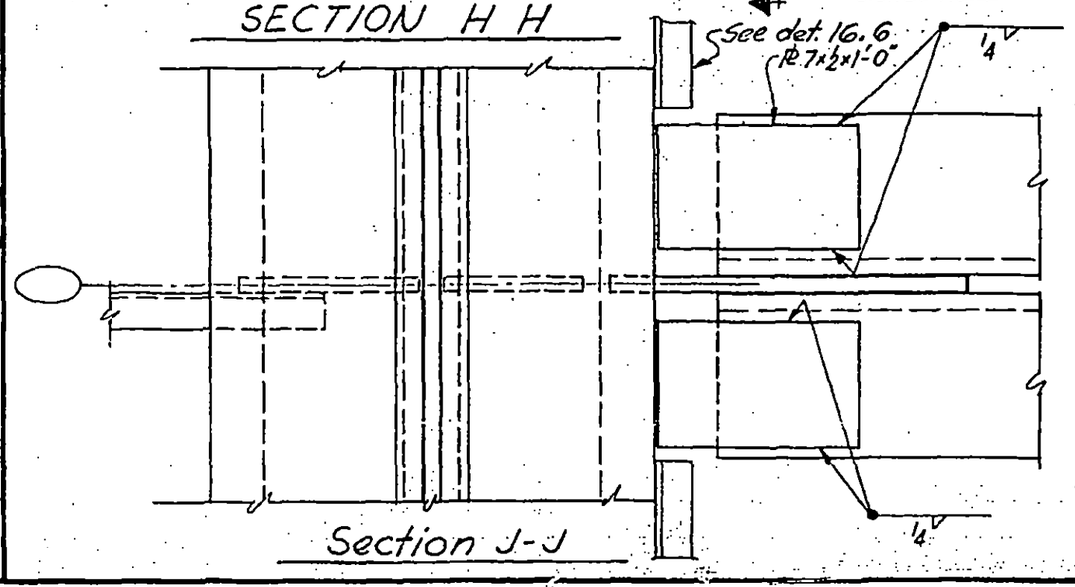

Section J-J

LICENSED PROFESSIONAL ENGINEER
LESLIE E. ROBERTSON
No. 34360
UNIVERSITY OF THE STATE OF NEW YORK

DESIGNED K. Hwang
DRAWN J. Gricius
REVIEWED W. Brewer

7-B8-8.15

SKILLING, HELLE, CHRISTIANSEN, ROBERTSON — Structural & Civil Engineers

PROJECT: THE WORLD TRADE CENTER | TITLE: FLOOR TRUSS DETAIL 8.14 | DATE: 3-19-69

REVISIONS

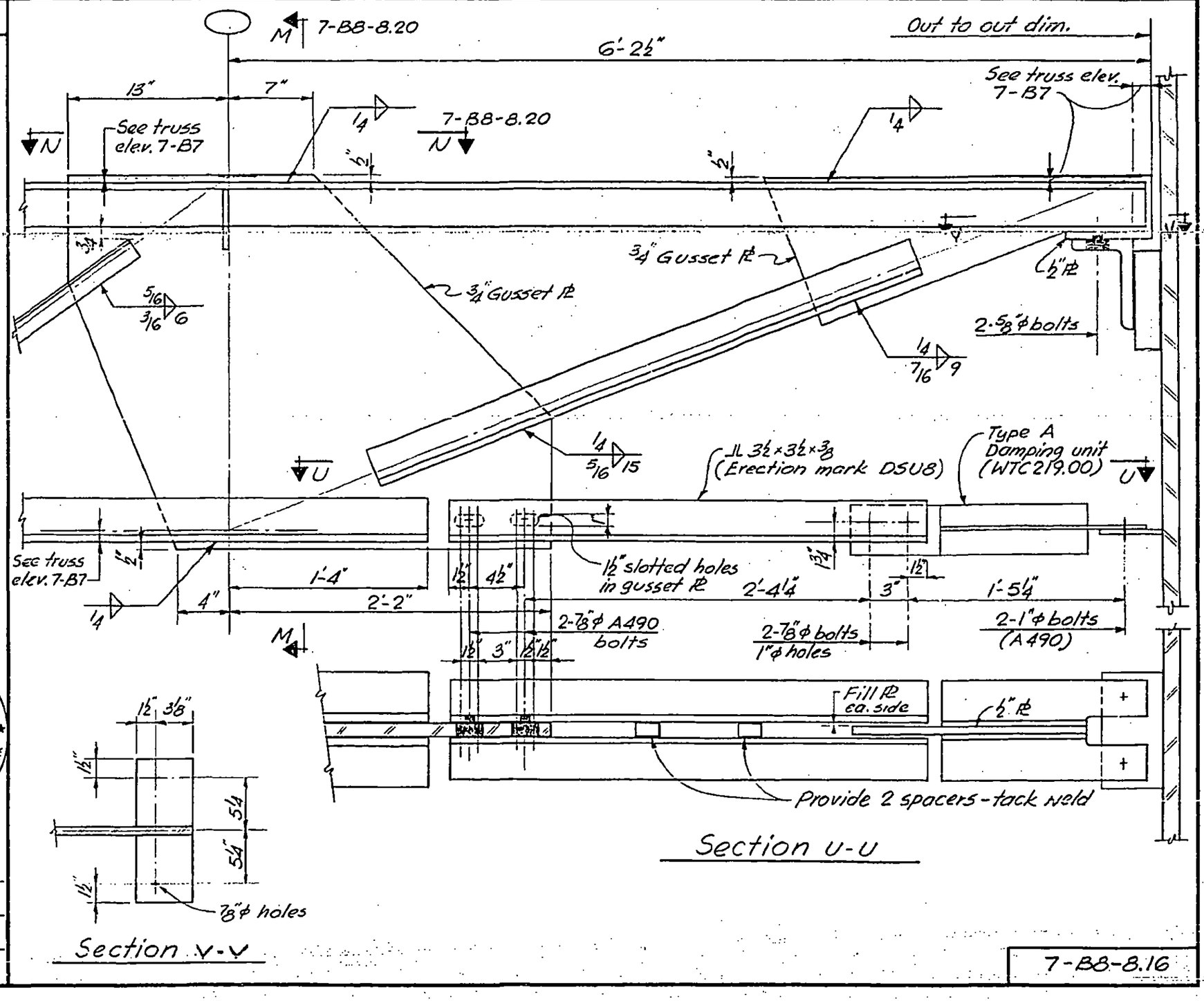

LICENSED PROFESSIONAL ENGINEER — LESLIE E. ROBERTSON — No. 34360 — UNIVERSITY OF THE STATE OF NEW YORK

DESIGNED K. Hwang

DRAWN J. Gricius

REVIEWED W. Brewer

7-B8-8.16

SKILLING, HELLE, CHRISTIANSEN, ROBERTSON — Structural & Civil Engineers

PROJECT THE WORLD TRADE CENTER | TITLE FLOOR TRUSS DETAIL 8.15 & 8.16 | DATE 3-19-69

REVISIONS

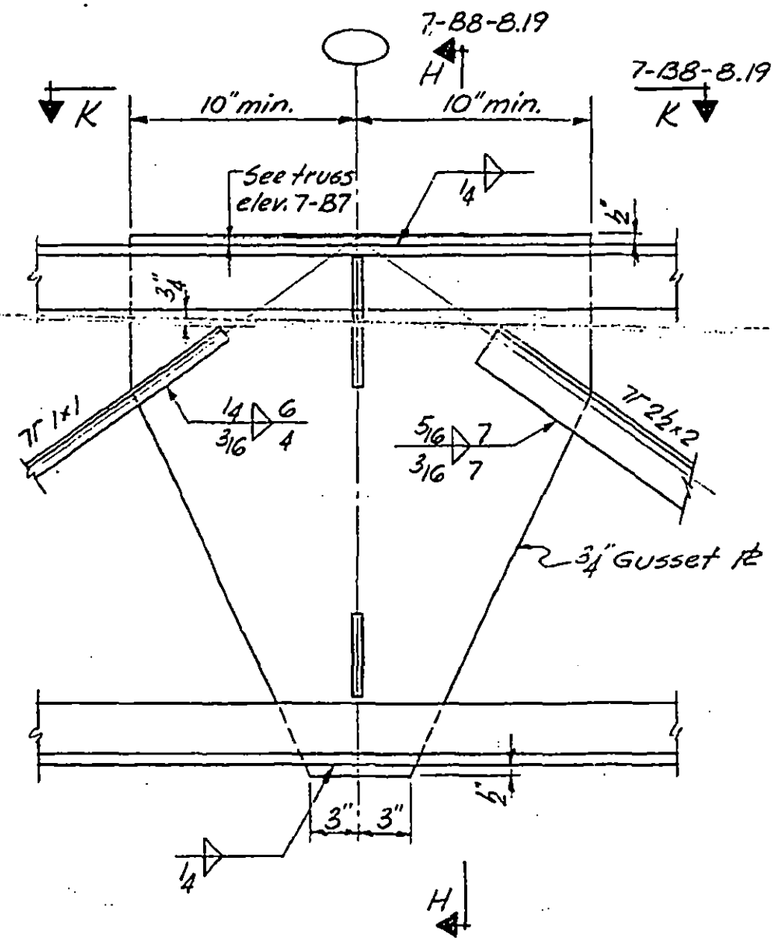

DETAIL 8.15

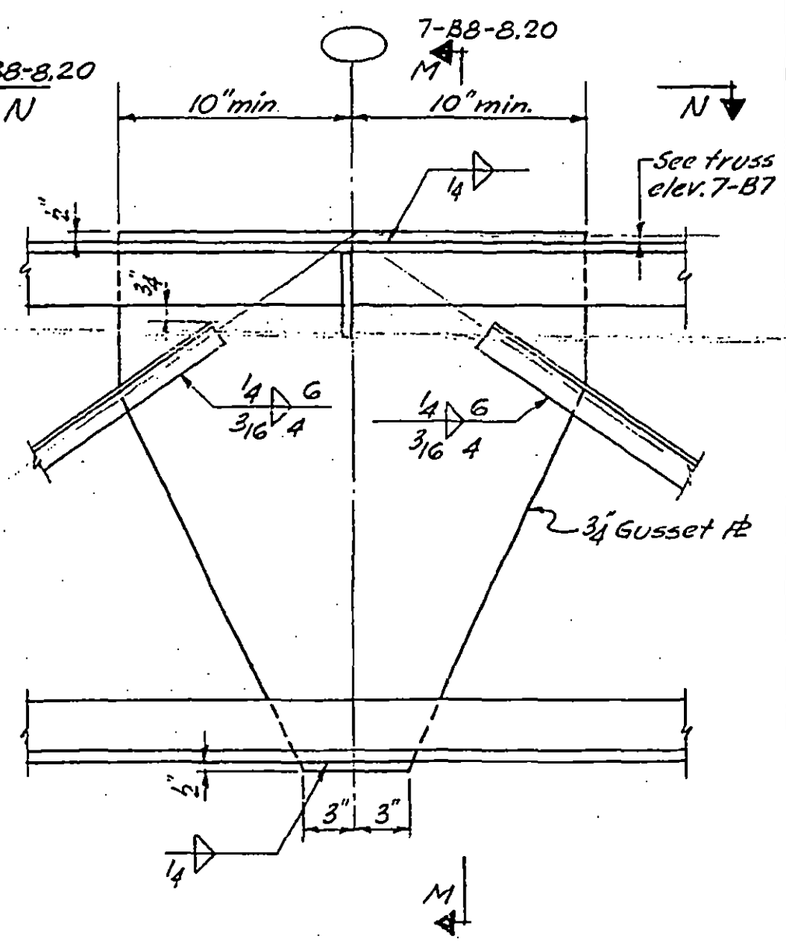

DETAIL 8.16

LICENSED PROFESSIONAL ENGINEER
LESLIE E. ROBERTSON
No. 34360
UNIVERSITY OF THE STATE OF NEW YORK

DESIGNED K. Obwang
DRAWN J. Gricius
REVIEWED W. Brewer

7-B8-8.17

SKILLING, HELLE, CHRISTIANSEN, ROBERTSON — Structural & Civil Engineers

PROJECT: THE WORLD TRADE CENTER | TITLE: FLOOR TRUSS DETAIL 8.17 | DATE: 3-19-69

REVISIONS

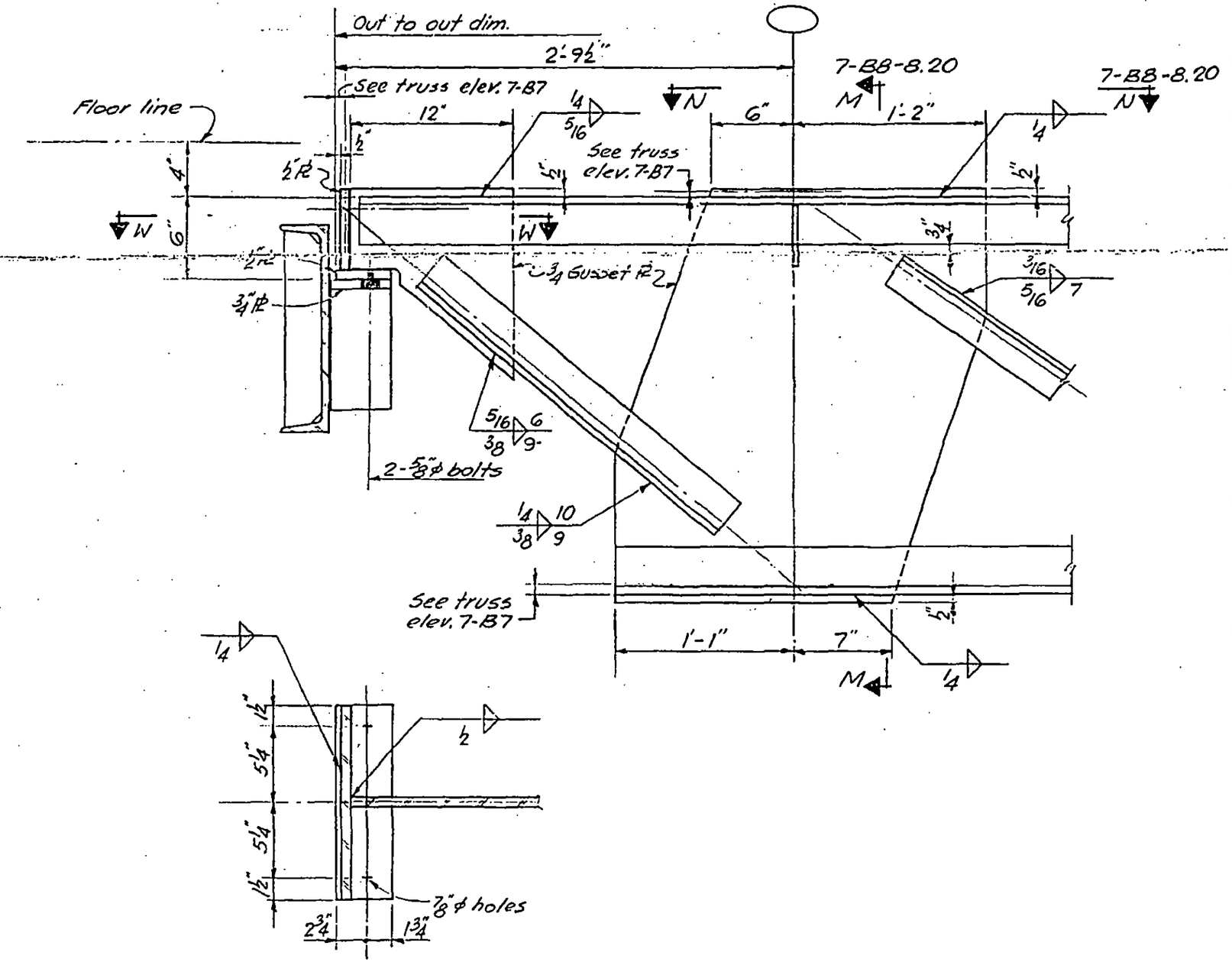

Section w-w

LICENSED PROFESSIONAL ENGINEER — LESLIE E. ROBERTSON — No. 34360 — UNIVERSITY OF THE STATE OF NEW YORK

DESIGNED K. Edwards

DRAWN J. Gricius

REVIEWED W. Brewer

7-B8-8.18

SKILLING, HELLE, CHRISTIANSEN, ROBERTSON — Structural & Civil Engineers

PROJECT: THE WORLD TRADE CENTER | TITLE: FLOOR TRUSS DETAILS SECTIONS H-H, L-L | DATE: 3-19-69

REVISIONS

7-14-69

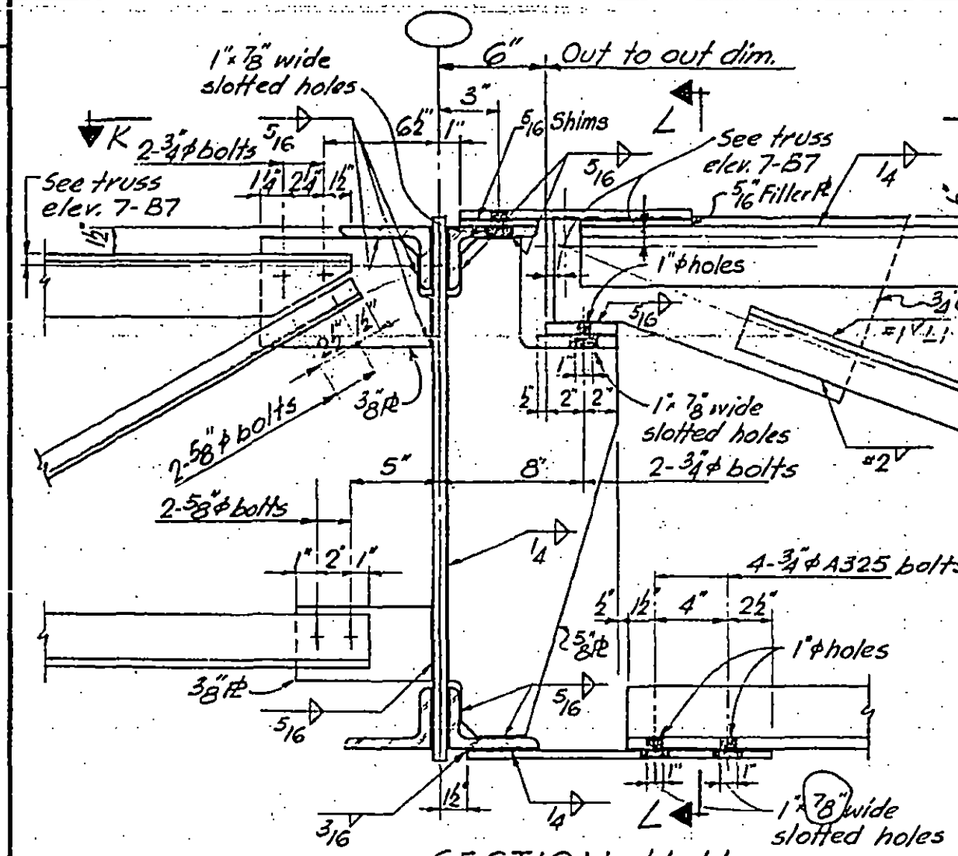

SECTION H-H

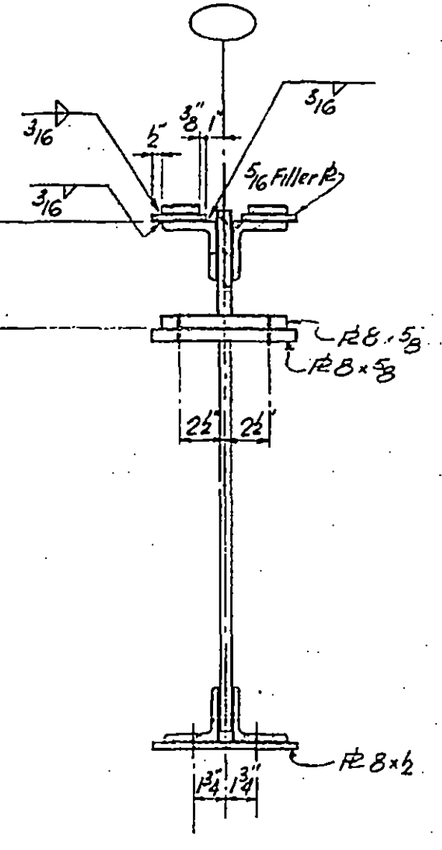

Section L-L

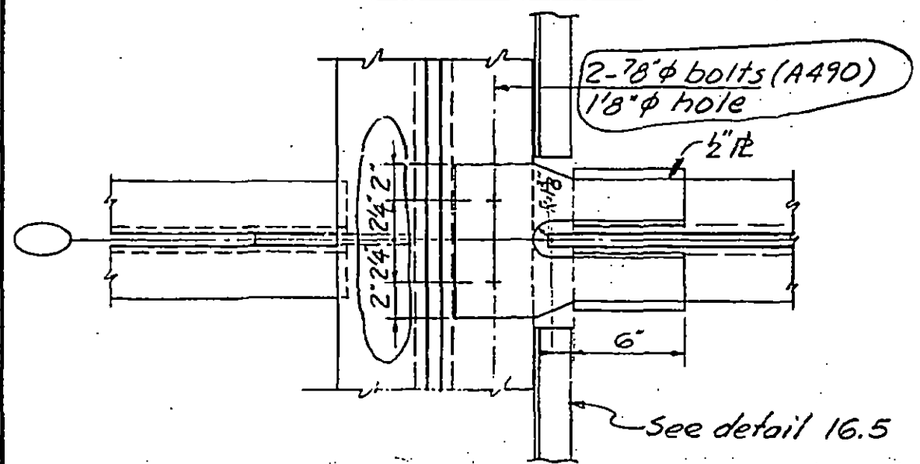

Section K-K

LICENSED PROFESSIONAL ENGINEER — LESLIE E. ROBERTSON — No. 34360 — UNIVERSITY OF THE STATE OF NEW YORK

DESIGNED K. Hwang

DRAWN J. Gricius

REVIEWED W. Brewer

7-B8-8.19

SKILLING, HELLE, CHRISTIANSEN, ROBERTSON — Structural & Civil Engineers

PROJECT: THE WORLD TRADE CENTER | TITLE: FLOOR TRUSS DETAIL & SECTIONS M-M, N-N | DATE: 3-19-69

REVISIONS

7-14-69

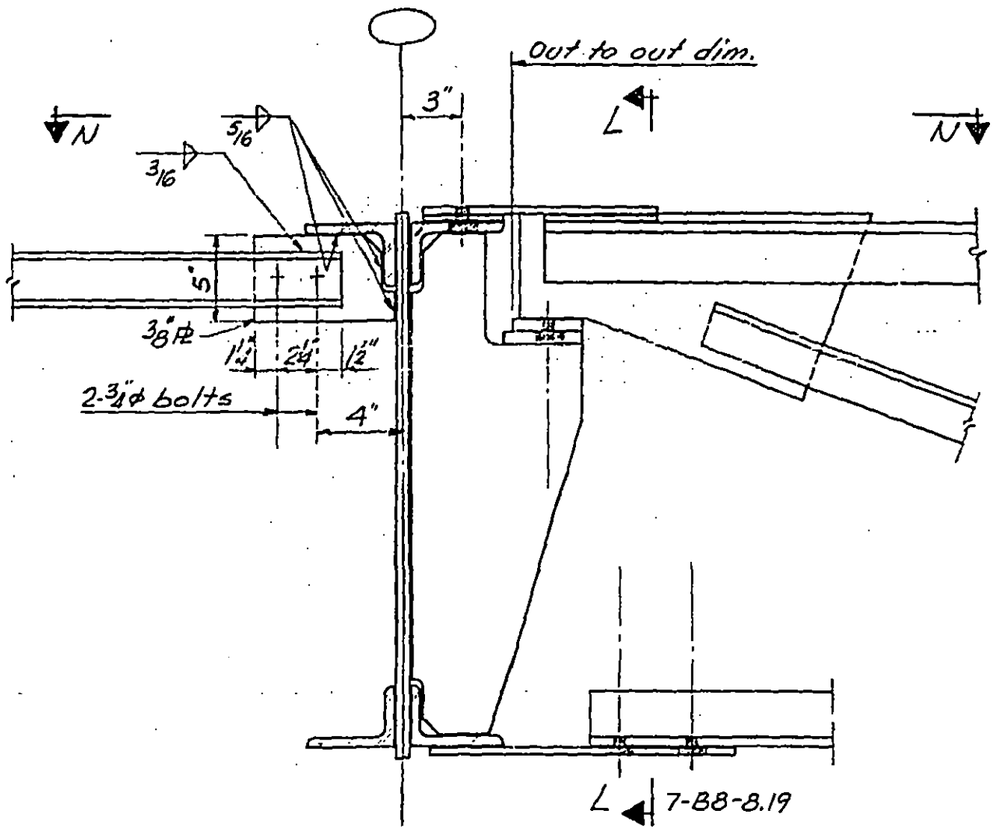

SECTION M-M same as section H-H (7-B8-8.19) except as shown

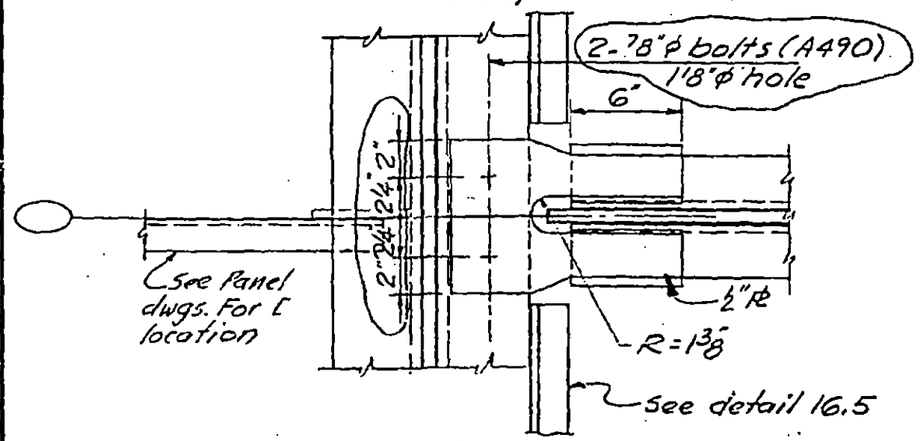

Section N-N

LICENSED PROFESSIONAL ENGINEER — LESLIE E. ROBERTSON — No. 34360 — UNIVERSITY OF THE STATE OF NEW YORK

DESIGNED K. Hsiung

DRAWN J. Gricius

REVIEWED W. Brewer

7-B8-8.20

SKILLING, HELLE, CHRISTIANSEN, ROBERTSON — Structural & Civil Engineers

PROJECT: THE WORLD TRADE CENTER | TITLE: FLOOR TRUSS DETAIL 9.1 & 9.2 | DATE: 3-19-69

REVISIONS

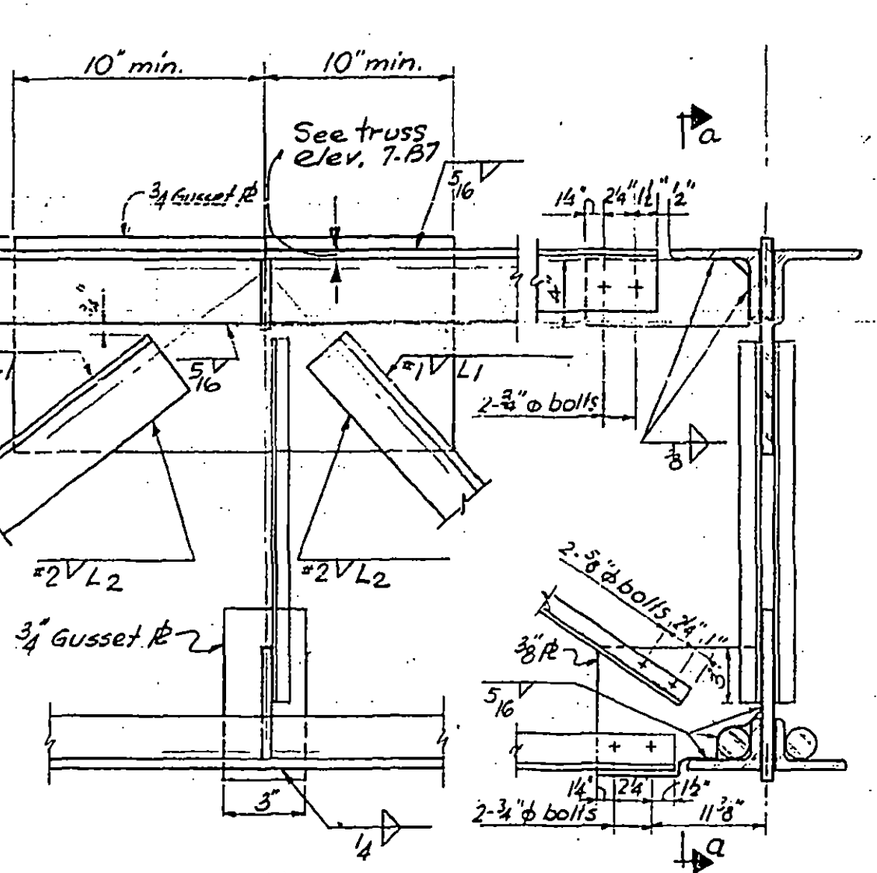

Section a-a

DETAIL 9.1

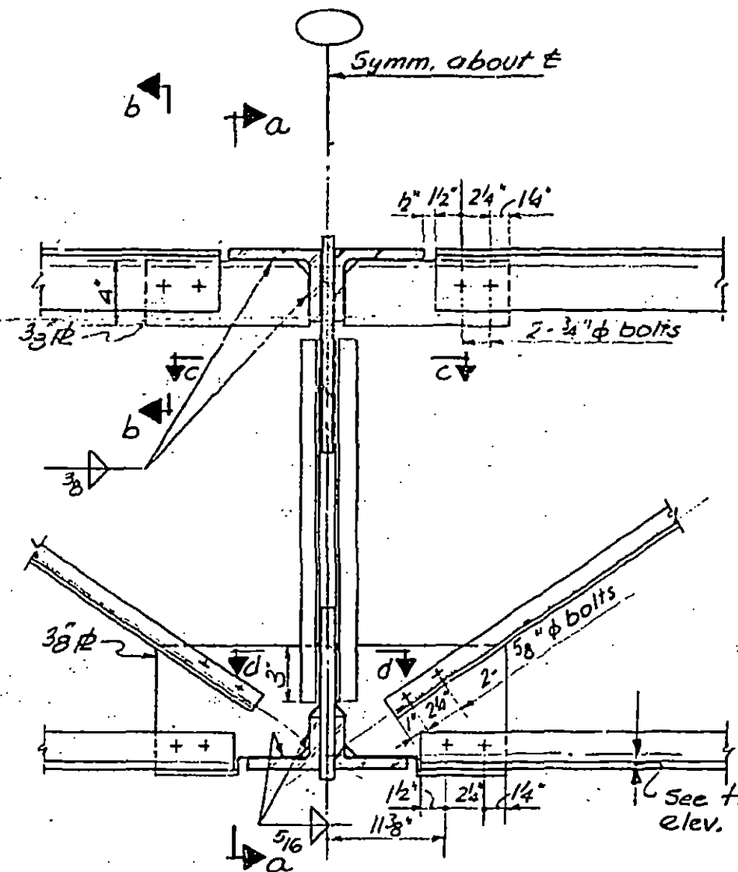

DETAIL 9.2

Member Size	Weld #1	L_1	Weld #2	L_2	Sign
1 3/4 x 1 1/4 x 1/4	1/4	6	3/16	4	–
2 1/2 x 1 1/2 x 1/4	1/4	6	3/16	4	–
2 1/2 x 2 x 1/4	1/4	6	3/16	4	–
2 1/2 x 1 1/2 x 5/16	1/4	6	1/4	4	–
4 x 3 1/2 x 7/16	9/16	10	3/8	7	–
1 x 1 x 1/4	1/4	6	3/16	4	+
1 1/4 x 1 1/4 x 1/8	1/4	6	3/16	4	+
2 1/2 x 2 x 1/4	5/16	7	3/16	5	+
3 x 2 x 1/2	7/16	9	3/8	6	+

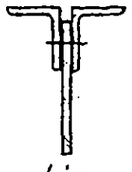

Section b-b

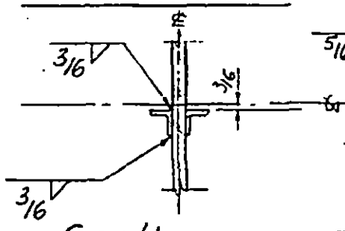

Section c-c

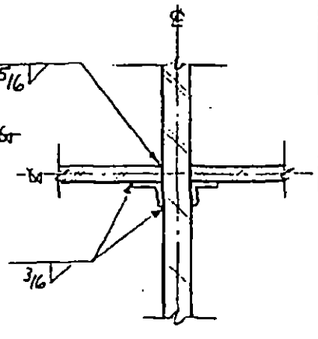

Section d-d

LICENSED PROFESSIONAL ENGINEER — LESLIE E. ROBERTSON — No. 34360 — UNIVERSITY OF THE STATE OF NEW YORK

DESIGNED K. Hwang
DRAWN J. Gricius
REVIEWED W. Brewer

7-B8-9.1

SKILLING, HELLE, CHRISTIANSEN, ROBERTSON — Structural & Civil Engineers

PROJECT: THE WORLD TRADE CENTER | TITLE: DETAIL 10.1 | DATE: 3-19-69

REVISIONS

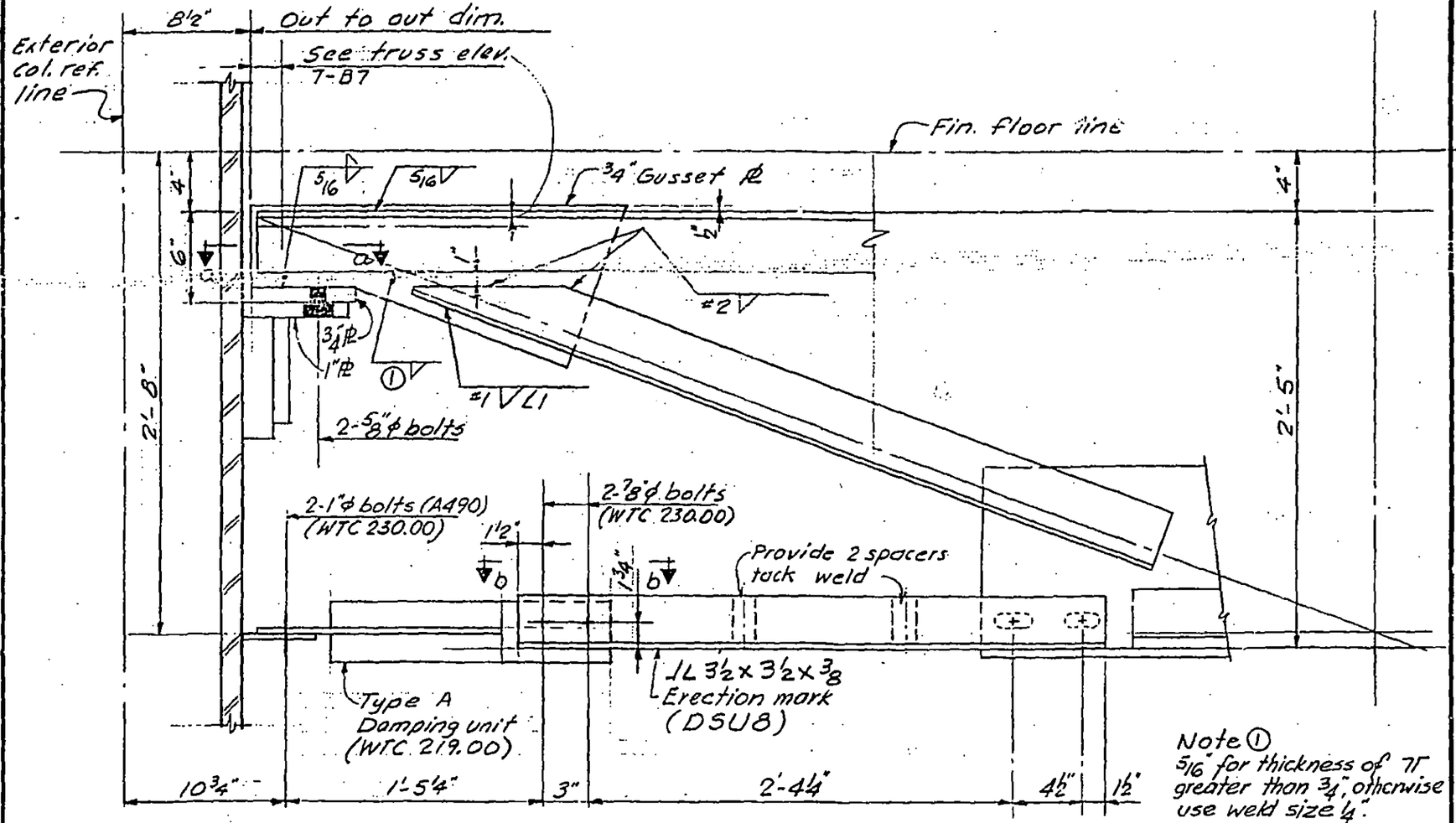

Note ①
5/16" for thickness of 7" greater than ¾", otherwise use weld size ¼".

Member size	End Diagonal		
	Weld #1	L1	Weld #2
1¼ x 1¼ x ¼	¼	6	3/16
1¾ x 1¾ x ¼	5/16	6	3/16
2½ x 2 x ¼	5/16	7	3/16
2½ x 1½ x 5/16	5/16	7	¼
3 x 2 x ¼	⅜	6	3/16
2½ x 2 x 5/16	⅜	7	¼
2½ x 2 x ⅜	⅜	8	5/16
3 x 2 x ⅜	⅜	9	5/16

Member size	End Diagonal		
	Weld #1	L1	Weld #2
3 x 2 x 7/16	⅜	9	5/16
3 x 2 x ½	7/16	9	⅜
4 x 3 x ⅜	½	10	5/16
4 x 3½ x ⅜	9/16	10	5/16
4 x 3½ x ½	11/16	10	7/16

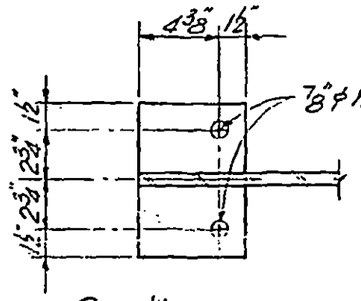

Section a-a

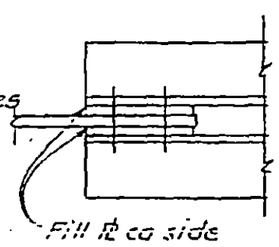

Section b-b

7-BA-10.1

LICENSED PROFESSIONAL ENGINEER — LESLIE E. ROBERTSON — No. 34360 — UNIVERSITY OF THE STATE OF NEW YORK

DESIGNED K. Shwany
DRAWN A.L. FRANQUI
REVIEWED W. Brewer

SKILLING, HELLE, CHRISTIANSEN, ROBERTSON — Structural & Civil Engineers

PROJECT: THE WORLD TRADE CENTER | TITLE: FLOOR TRUSS DETAIL 10.2 | DATE: 3-19-69

REVISIONS

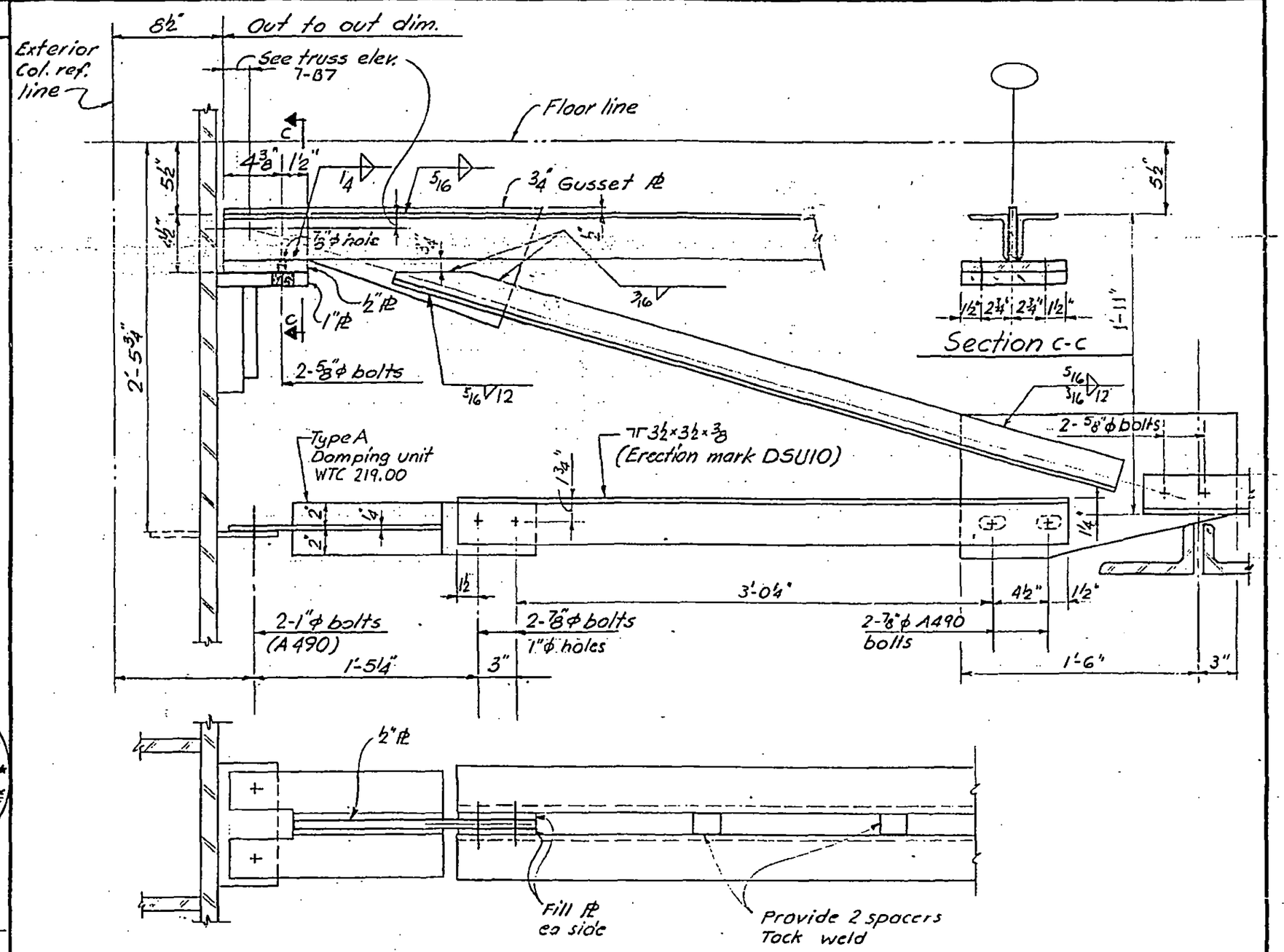

Plan

LICENSED PROFESSIONAL ENGINEER — LESLIE E. ROBERTSON — No. 34360 — UNIVERSITY OF THE STATE OF NEW YORK

DESIGNED: K. Hwang
DRAWN: J. Gricius
REVIEWED: W. C. Brewer

7-B8-10.2

SKILLING, HELLE, CHRISTIANSEN, ROBERTSON — Structural & Civil Engineers

PROJECT: THE WORLD TRADE CENTER | TITLE: FLOOR TRUSS DETAIL 10.3 | DATE: 3-19-69

REVISIONS

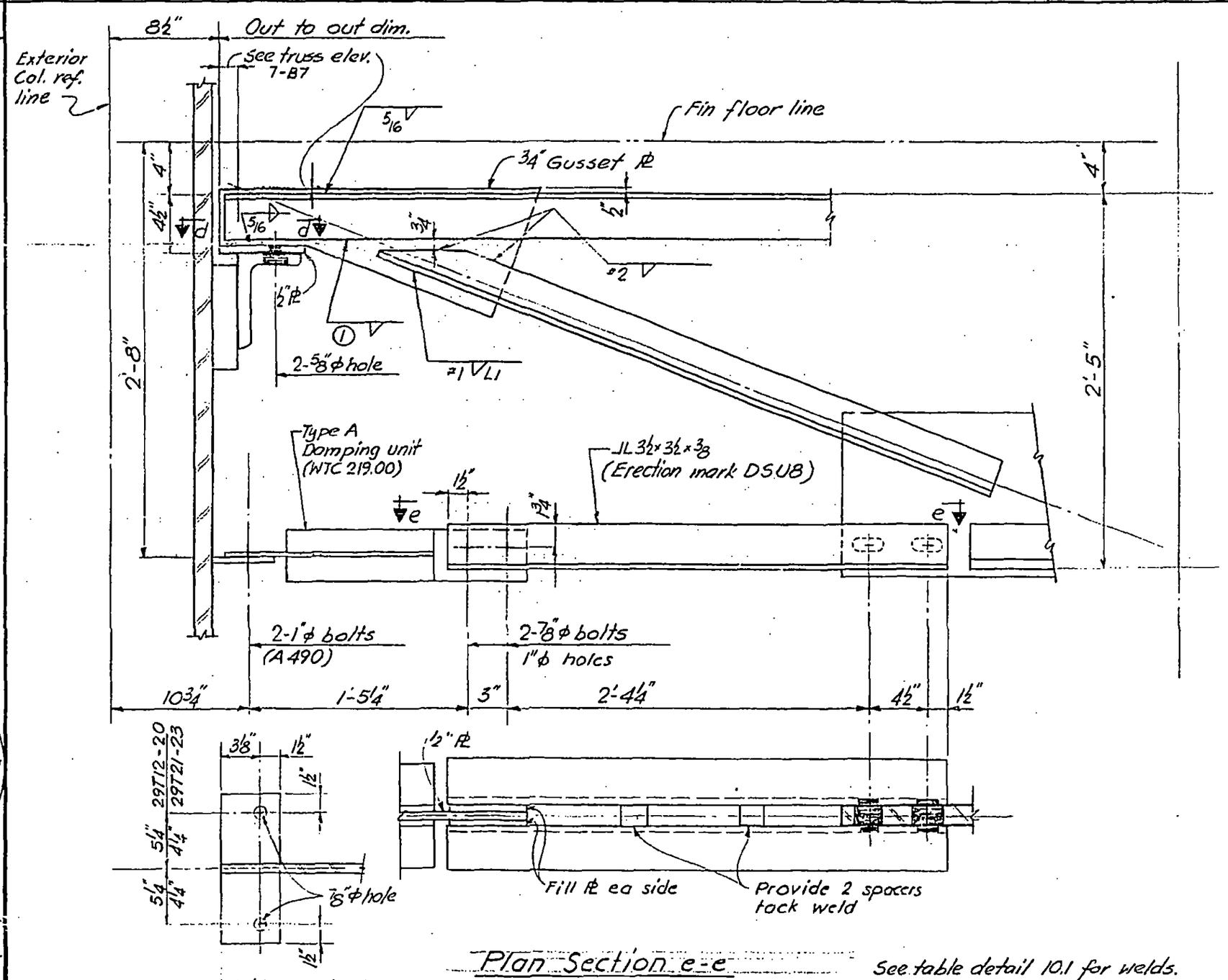

LICENSED PROFESSIONAL ENGINEER — LESLIE E. ROBERTSON — No. 34380 — UNIVERSITY OF THE STATE OF NEW YORK

DESIGNED K. Hwang

DRAWN J. Gricius

REVIEWED W. Brewer

7-B8-10.3

SKILLING, HELLE, CHRISTIANSEN, ROBERTSON — Structural & Civil Engineers

PROJECT: THE WORLD TRADE CENTER | TITLE: FLOOR TRUSS DETAIL 10.4 | DATE: 3-19-69

REVISIONS

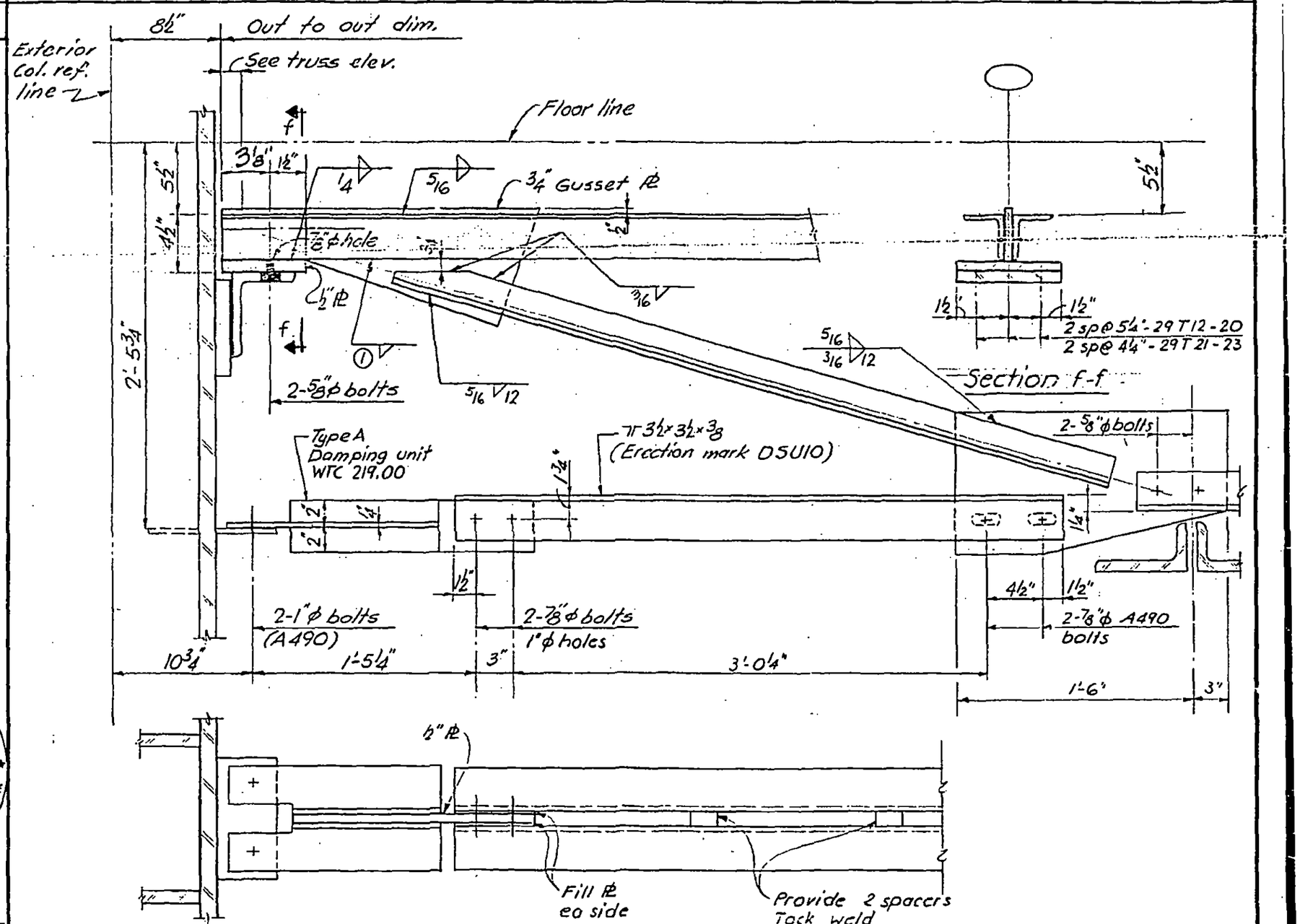

Plan

LICENSED PROFESSIONAL ENGINEER — LESLIE E. ROBERTSON — No. 34360 — UNIVERSITY OF THE STATE OF NEW YORK

DESIGNED K. Hwang

DRAWN J. Gricius

REVIEWED W. Brewer

7-B8-10.4

SKILLING, HELLE, CHRISTIANSEN, ROBERTSON — Structural & Civil Engineers

PROJECT: THE WORLD TRADE CENTER | TITLE: FLOOR TRUSS DETAIL 10.5 | DATE: 3-19-69

REVISIONS

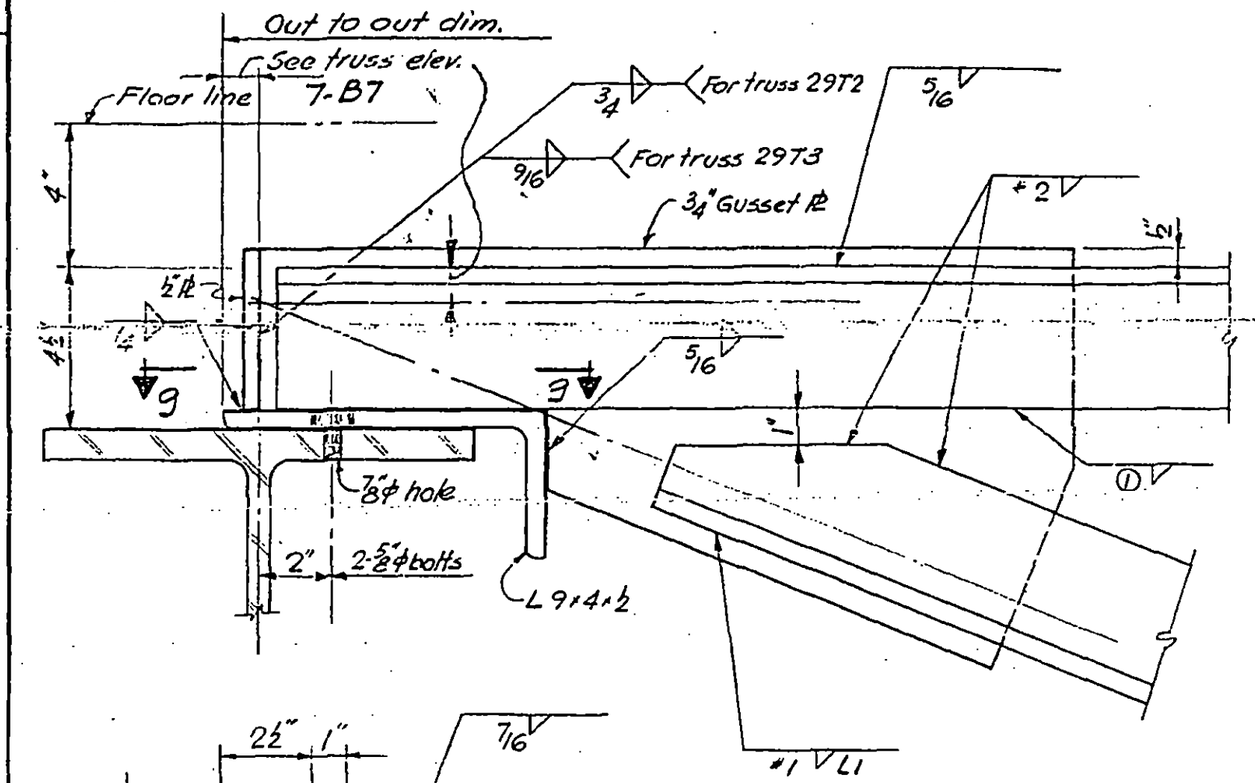

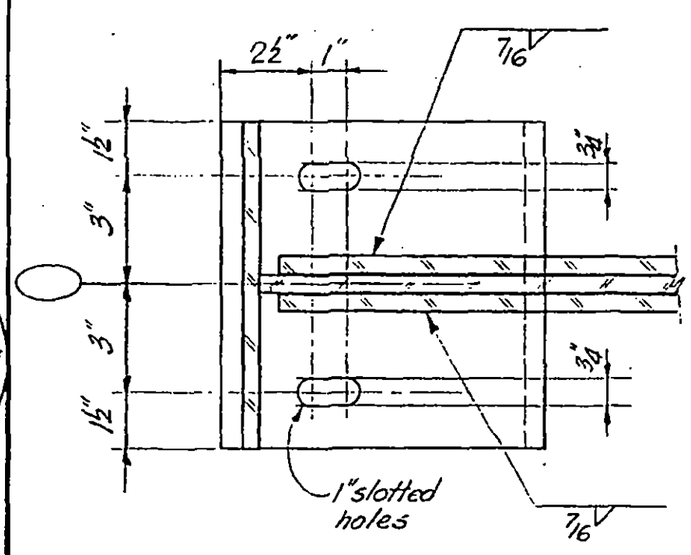

Plan Section 9-9

See table detail 10.1 for welds.

7-B8-10.5

LICENSED PROFESSIONAL ENGINEER — LESLIE E. ROBERTSON — No. 34360 — UNIVERSITY OF THE STATE OF NEW YORK

DESIGNED K. Hwang

DRAWN J. Gricius

REVISED W. Brewer

SKILLING, HELLE, CHRISTIANSEN, ROBERTSON — Structural & Civil Engineers

PROJECT: THE WORLD TRADE CENTER | TITLE: FLOOR TRUSS DETAIL 10.6 | DATE: 3-19-69

REVISIONS

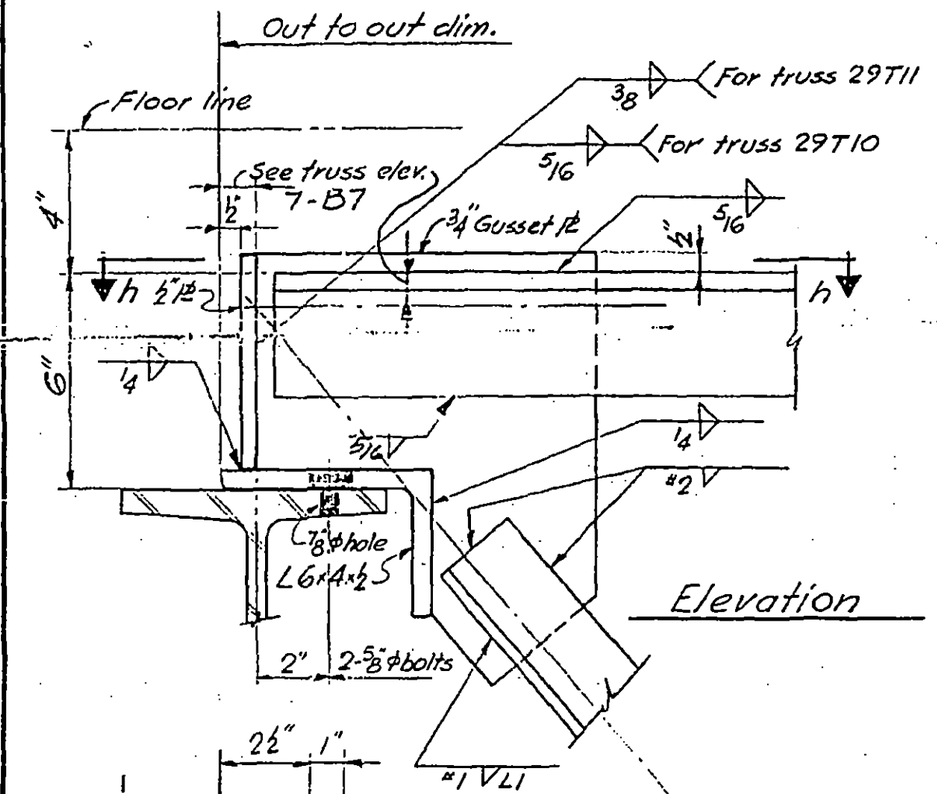

Elevation

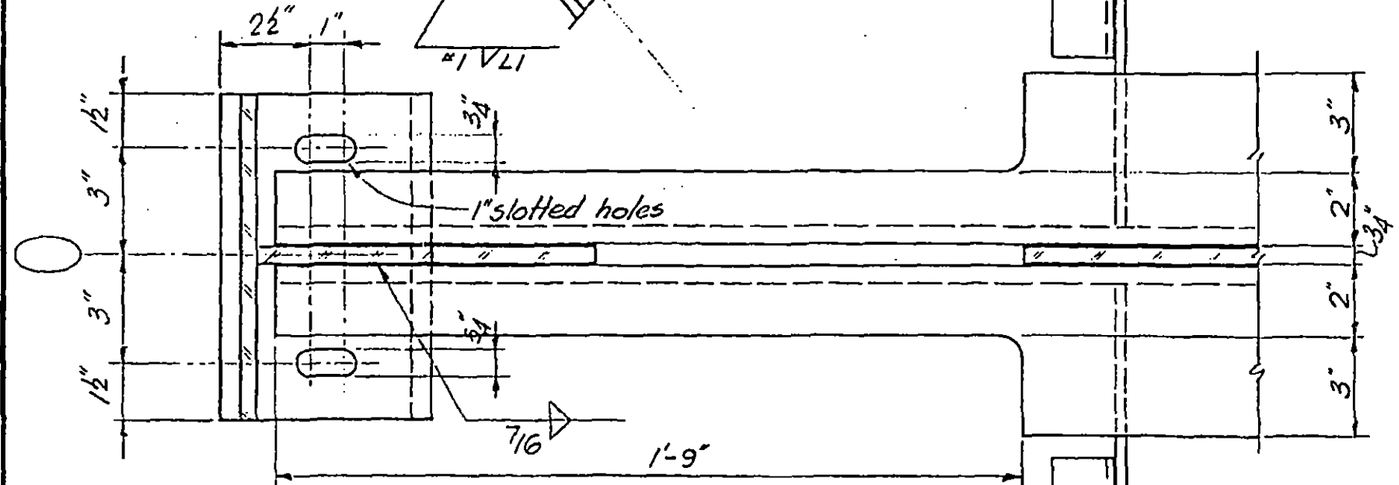

Plan Section h-h

See table detail 10.1 for welds.

LICENSED PROFESSIONAL ENGINEER — LESLIE E. ROBERTSON — No. 34360 — UNIVERSITY OF THE STATE OF NEW YORK

DESIGNED K. Hwang
DRAWN J. Gricius
REVIEWED W. Brewer R.

7-B8-10.6

SKILLING, HELLE, CHRISTIANSEN, ROBERTSON — Structural & Civil Engineers

PROJECT: THE WORLD TRADE CENTER | TITLE: FLOOR TRUSS DETAIL 10.7 | DATE: 3-19-69

REVISIONS

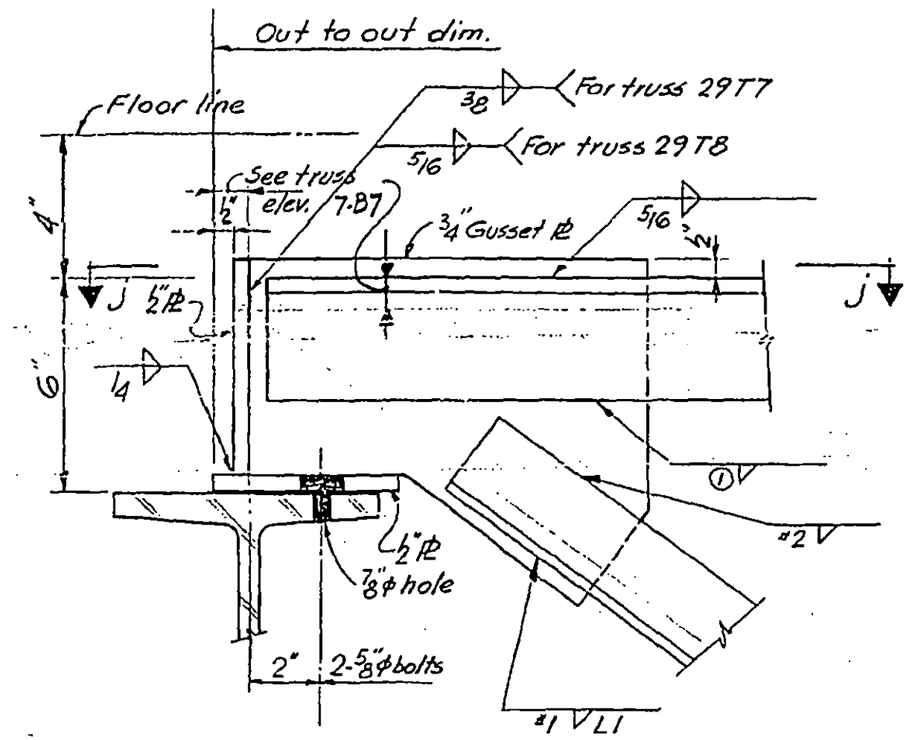

Elevation

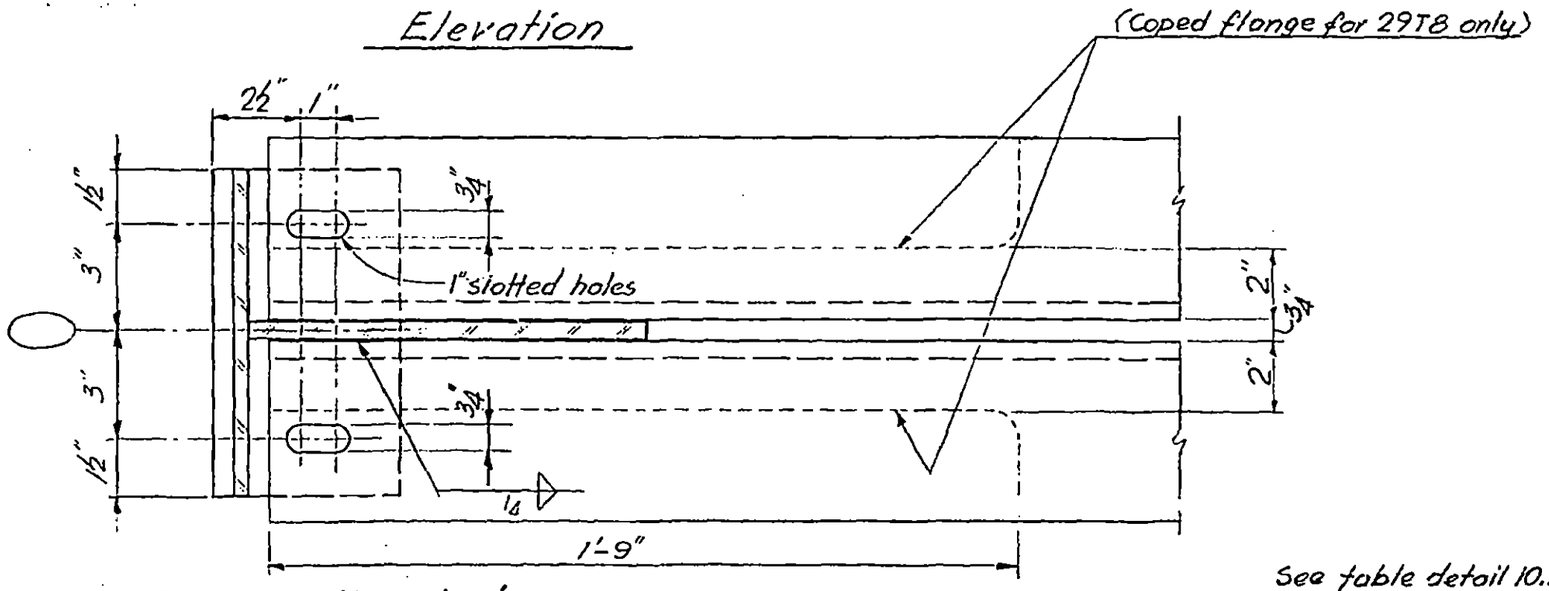

Plan Section j-j

See table detail 10.1 for welds.

7-B8-10.7

LICENSED PROFESSIONAL ENGINEER — LESLIE E. ROBERTSON — No. 34360 — UNIVERSITY OF THE STATE OF NEW YORK

DESIGNED K. Yowang

DRAWN J. Gricius

REVIEWED W. Brewer

SKILLING, HELLE, CHRISTIANSEN, ROBERTSON — Structural & Civil Engineers

PROJECT: THE WORLD TRADE CENTER | TITLE: FLOOR TRUSS DETAIL 10.8 | DATE: 3-19-69

REVISIONS

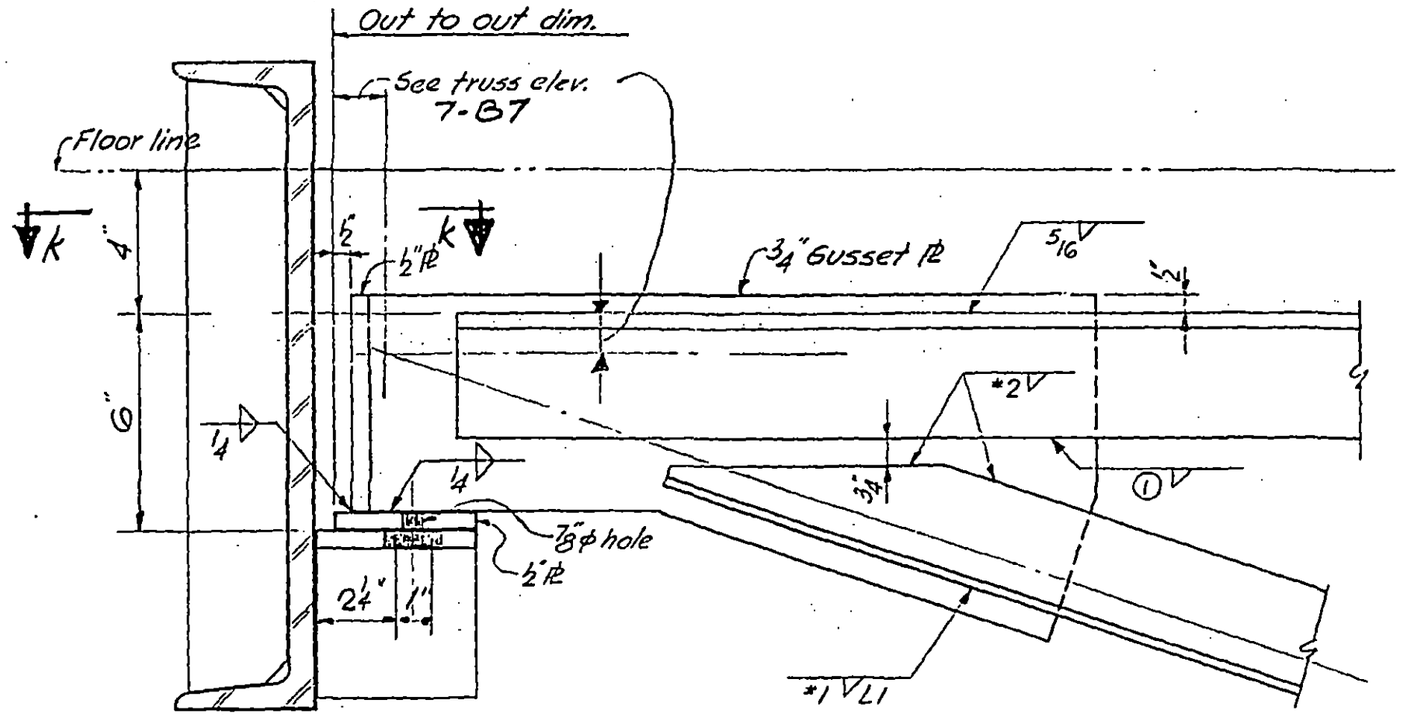

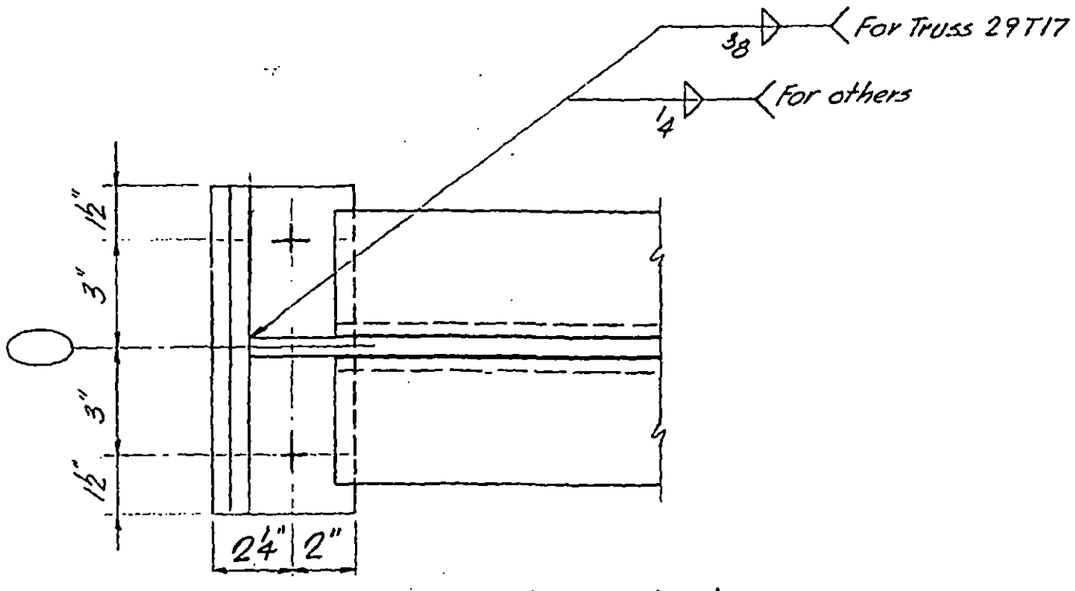

Plan Section k-k

See table detail 10.1 for welds.

7-B8-10.8

LICENSED PROFESSIONAL ENGINEER — LESLIE E. ROBERTSON — No. 34360 — UNIVERSITY OF THE STATE OF NEW YORK

DESIGNED K. Hwang

DRAWN J. Griclus

REVIEWED W. Brewer

SKILLING, HELLE, CHRISTIANSEN, ROBERTSON — Structural & Civil Engineers

PROJECT THE WORLD TRADE CENTER | TITLE FLOOR TRUSS DETAIL 10.9 | DATE 3-19-69

REVISIONS

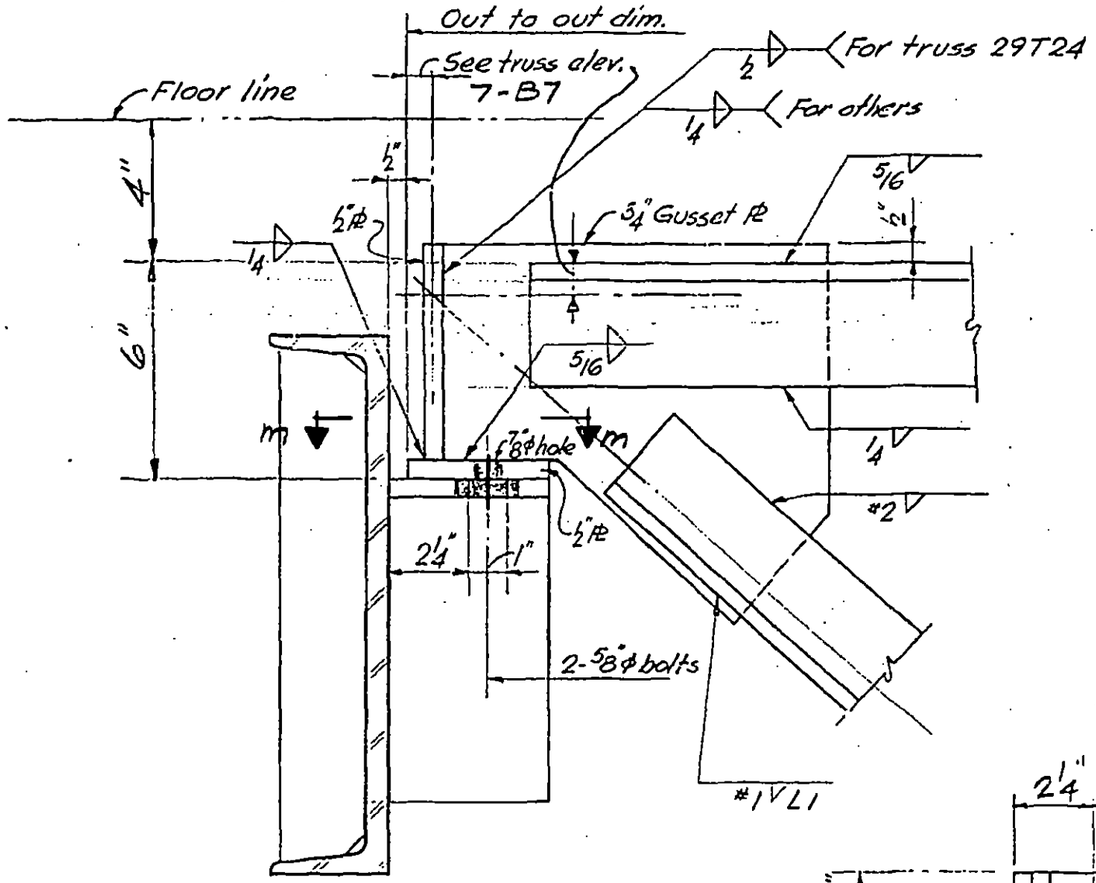

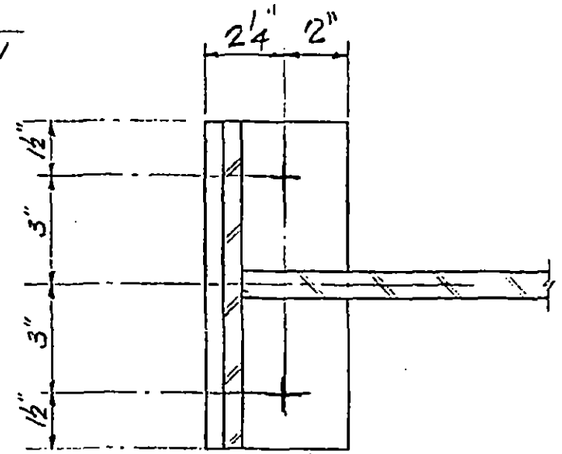

Plan Section m-m

See table Detail 10.1 for welds.

7-88-10.9

LICENSED PROFESSIONAL ENGINEER
LESLIE E. ROBERTSON
No. 34360
UNIVERSITY OF THE STATE OF NEW YORK

DESIGNED K. Ebwang

DRAWN J. Gricius

REVIEWED W. Brewer

SKILLING, HELLE, CHRISTIANSEN, ROBERTSON — Structural & Civil Engineers

PROJECT: THE WORLD TRADE CENTER | TITLE: FLOOR TRUSS DETAILS 12.1 - 12.5 & 12.9 & 12.10 | DATE: 3-19-69

REVISIONS

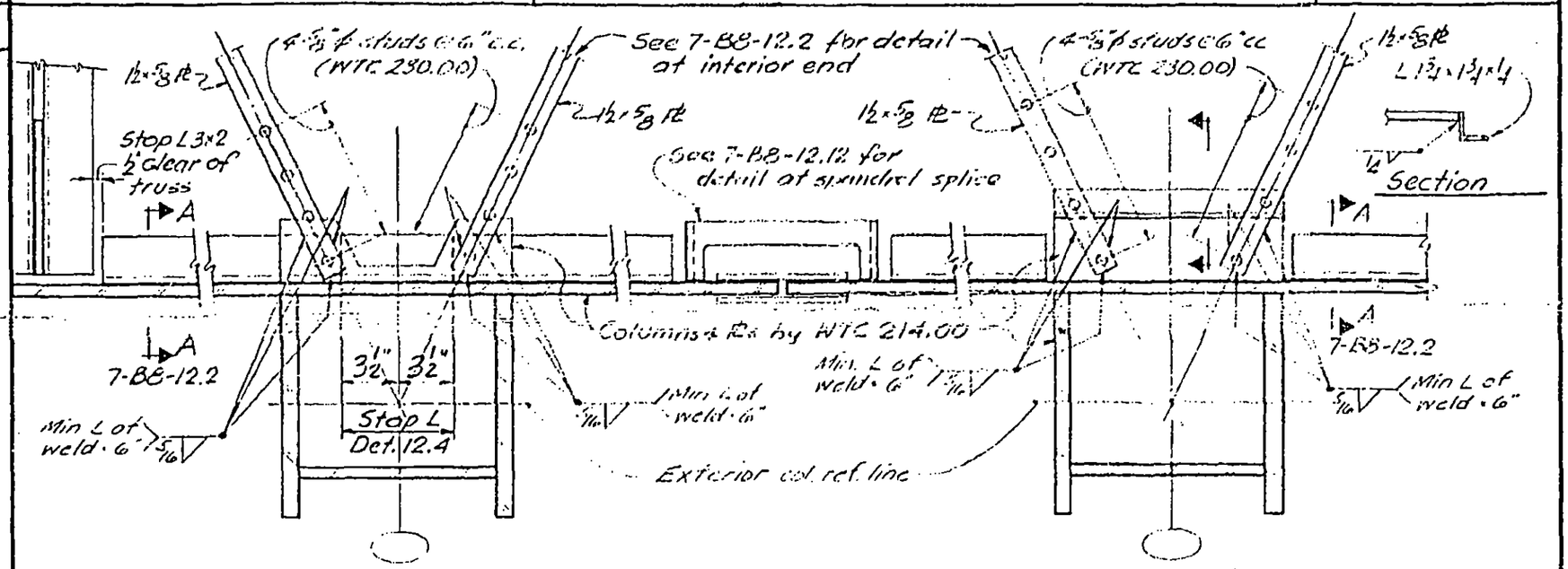

DETAIL 12.1 & 12.4

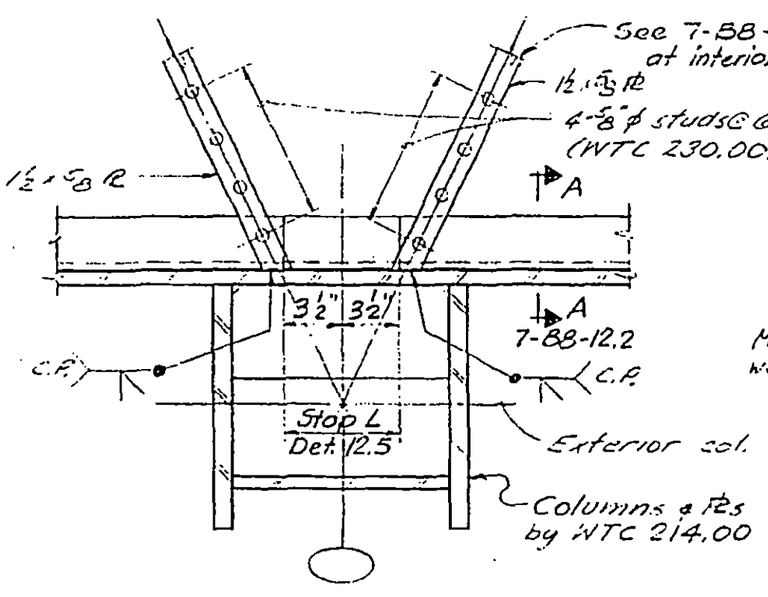

DETAIL 12.3 & 12.5

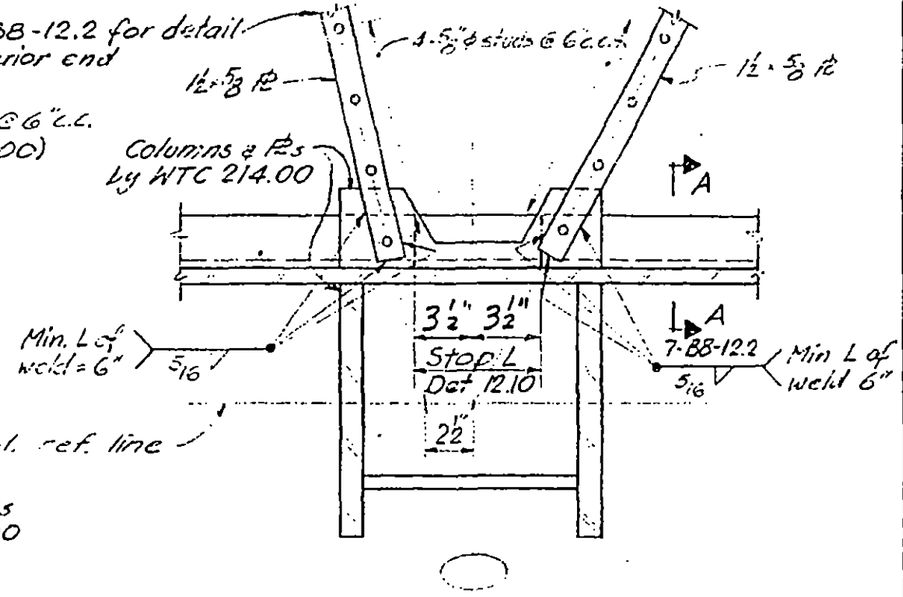

DETAIL 12.9 & 12.10

LICENSED PROFESSIONAL ENGINEER — LESLIE E. ROBERTSON — No. 34360 — UNIVERSITY OF THE STATE OF NEW YORK

DESIGNED

DRAWN: J. Adams

REVIEWED: W. Brewer

R.

7-BB-12.1

SKILLING, HELLE, CHRISTIANSEN, ROBERTSON — Structural & Civil Engineers

PROJECT: THE WORLD TRADE CENTER | TITLE: FLOOR TRUSS DETAILS 12.1 thru 12.11 | DATE: 3-19-69

REVISIONS

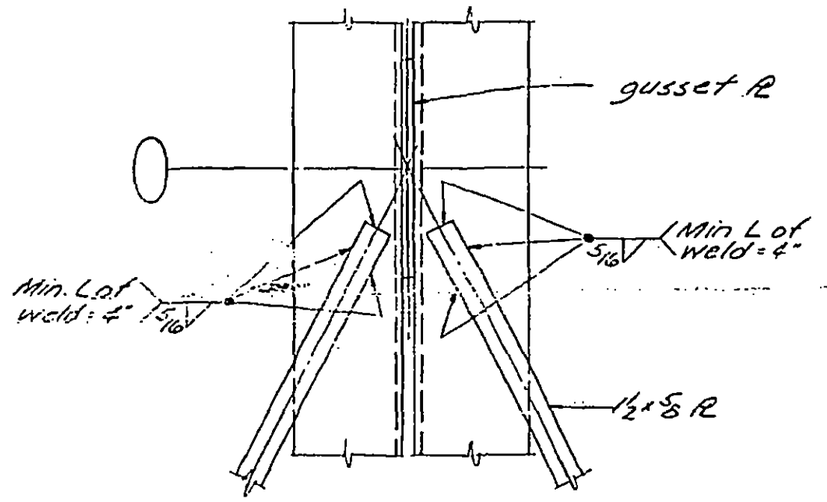

Interior Detail parallel to Truss

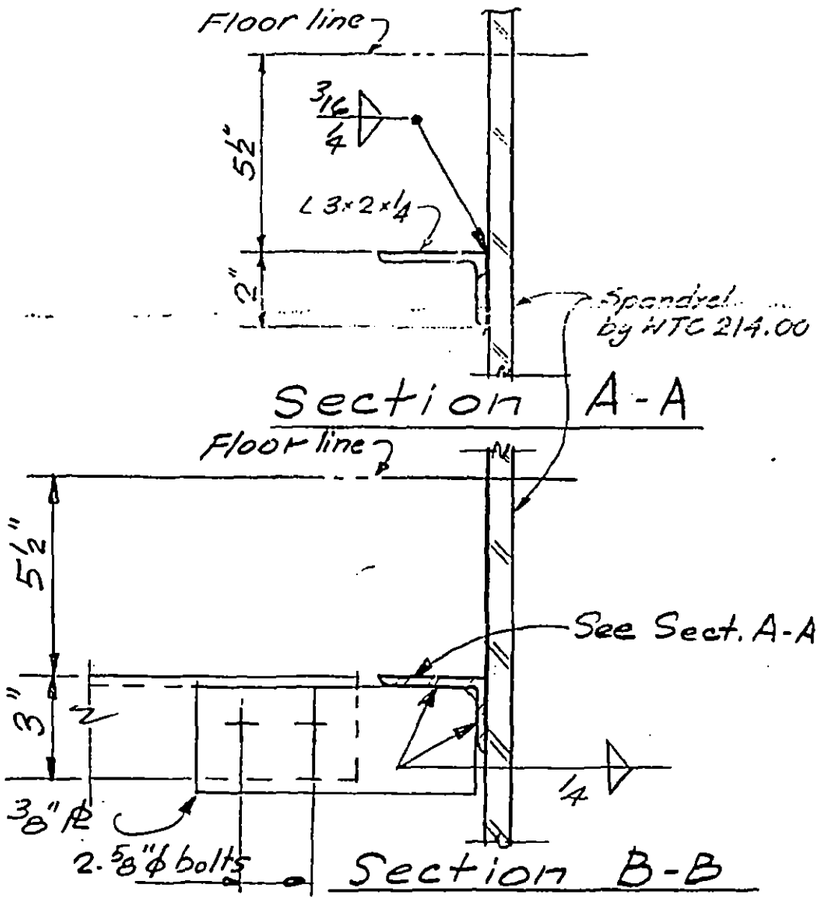

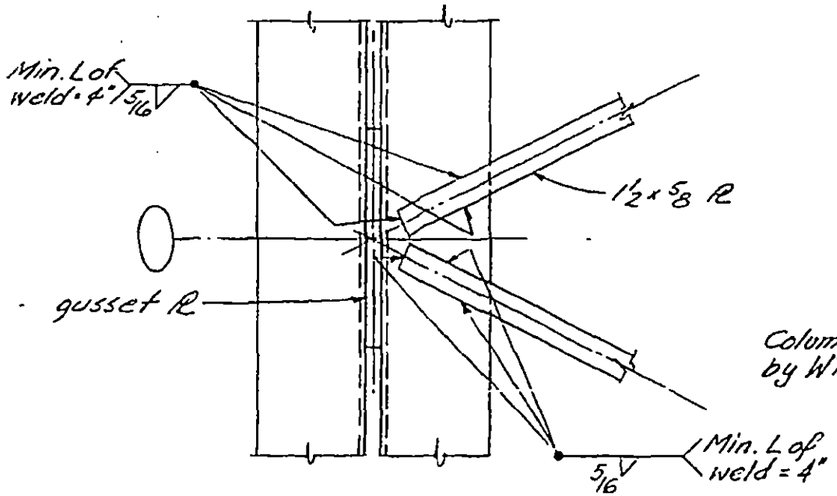

Interior Detail Perpendicular to Truss

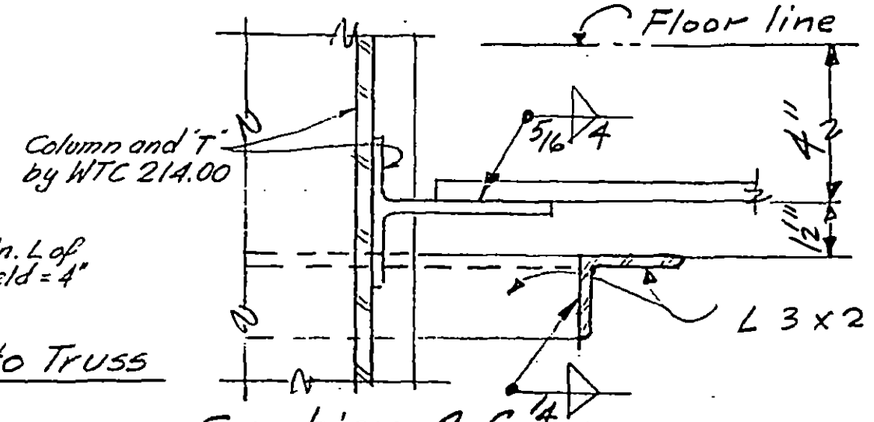

LICENSED PROFESSIONAL ENGINEER — LESLIE E. ROBERTSON — No. 34360 — UNIVERSITY OF THE STATE OF NEW YORK

DESIGNED

DRAWN J. Adams

REVIEWED W. Brewer

R.

7-88-12.2

SKILLING, HELLE, CHRISTIANSEN, ROBERTSON — Structural & Civil Engineers

PROJECT: THE WORLD TRADE CENTER | TITLE: FLOOR TRUSS DETAIL 12.6 & 12.7 | DATE: 3-19-69

REVISIONS

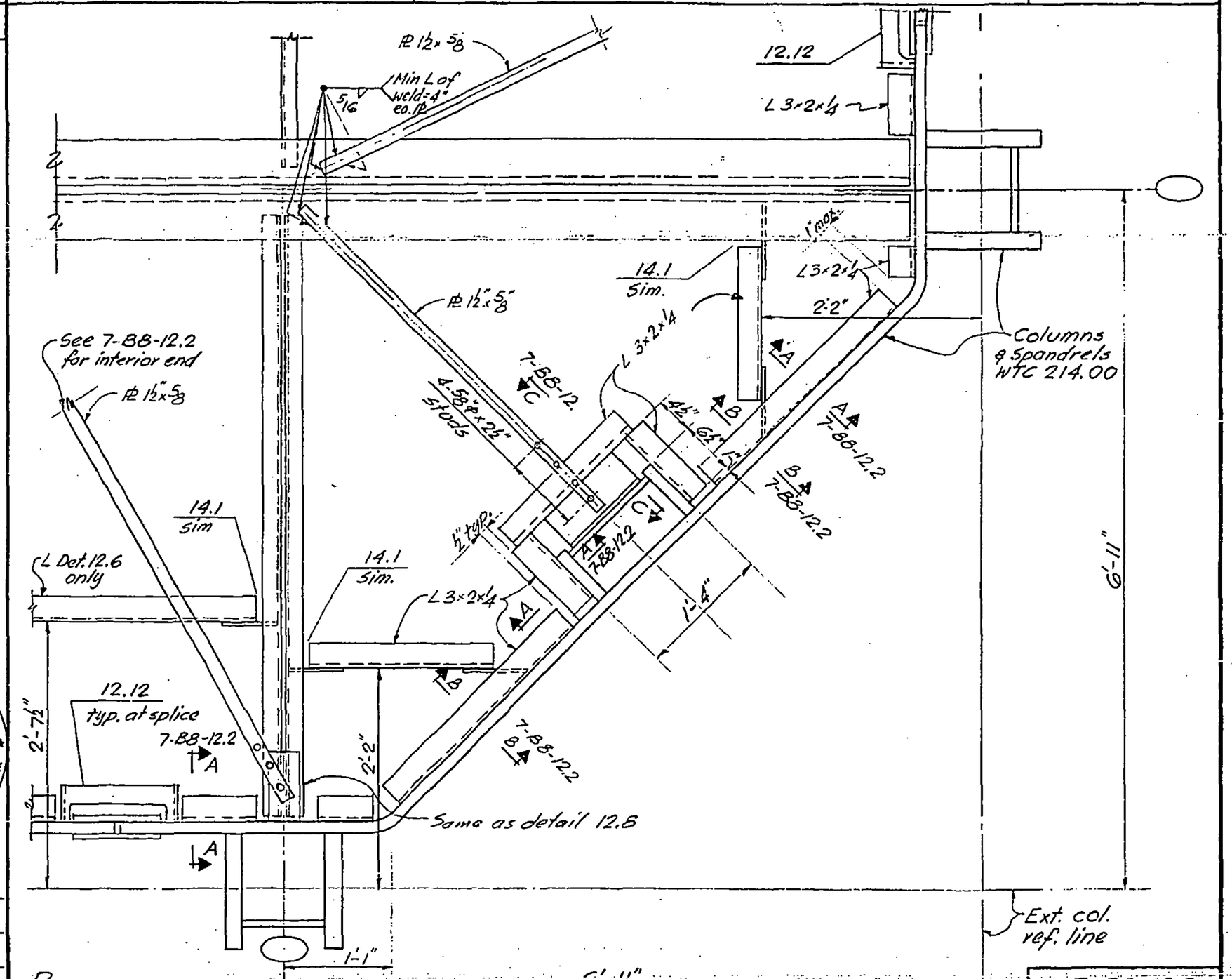

LICENSED PROFESSIONAL ENGINEER — LESLIE E. ROBERTSON — No. 34360 — UNIVERSITY OF THE STATE OF NEW YORK

DESIGNED

DRAWN J. Gricius

REVIEWED W. Brewer R.

7-88-12.3

SKILLING, HELLE, CHRISTIANSEN, ROBERTSON — Structural & Civil Engineers

PROJECT: THE WORLD TRADE CENTER | TITLE: FLOOR TRUSS DETAILS 12.8 & 12.11 | DATE: 3-19-69

REVISIONS

7-14-69

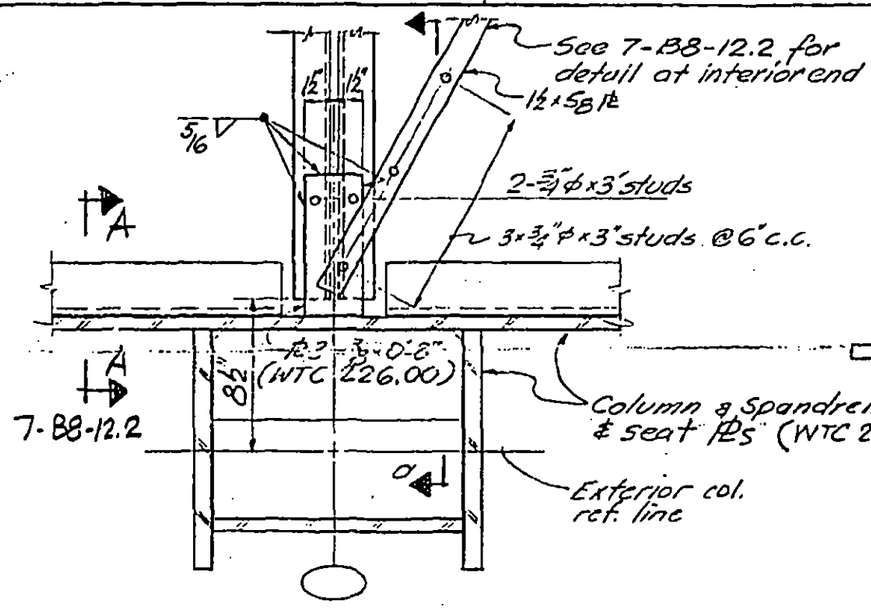

PLAN

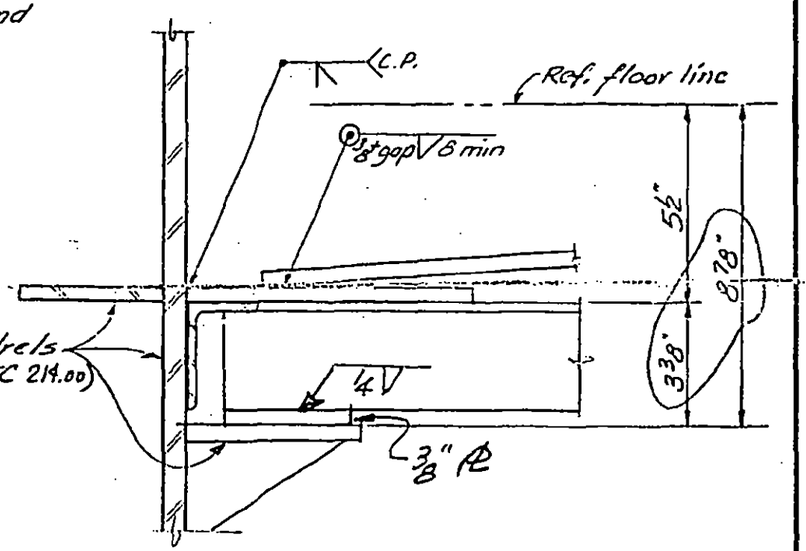

Section a-a

DETAIL 12.8

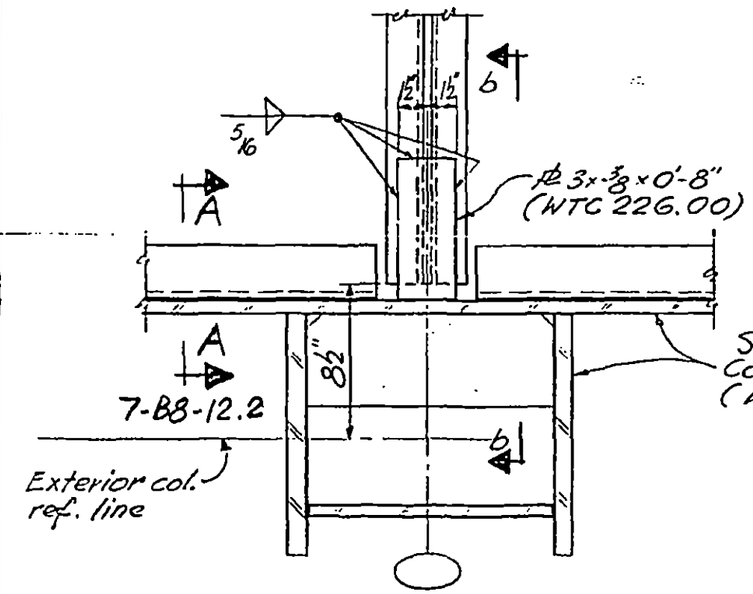

Plan

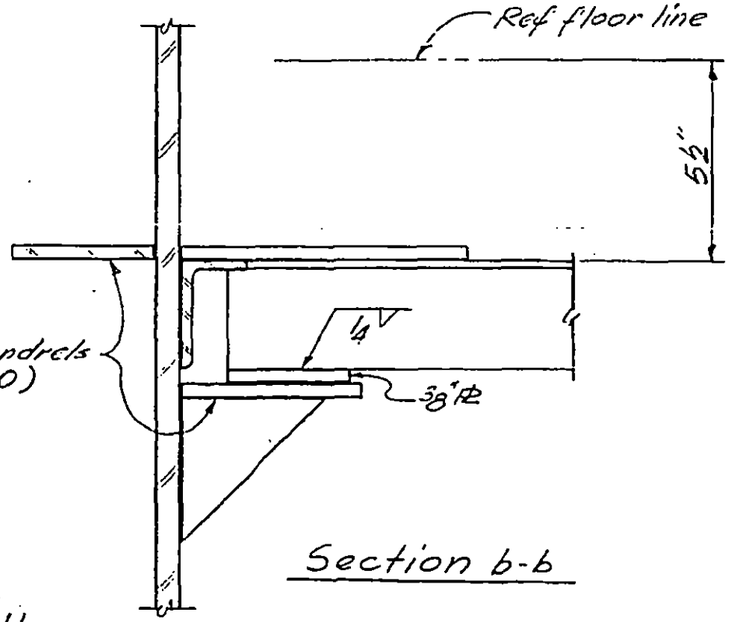

Section b-b

DETAIL 12.11

DESIGNED

DRAWN J. Adams

REVIEWED W. Brewer

T 55 12.4

LICENSED PROFESSIONAL ENGINEER — LESLIE E. ROBERTSON — No. 34360 — UNIVERSITY OF THE STATE OF NEW YORK

SKILLING, HELLE, CHRISTIANSEN, ROBERTSON — Structural & Civil Engineers

PROJECT: THE WORLD TRADE CENTER | TITLE: FLOOR TRUSS DETAIL 12.12 | DATE: 3-19-69

REVISIONS

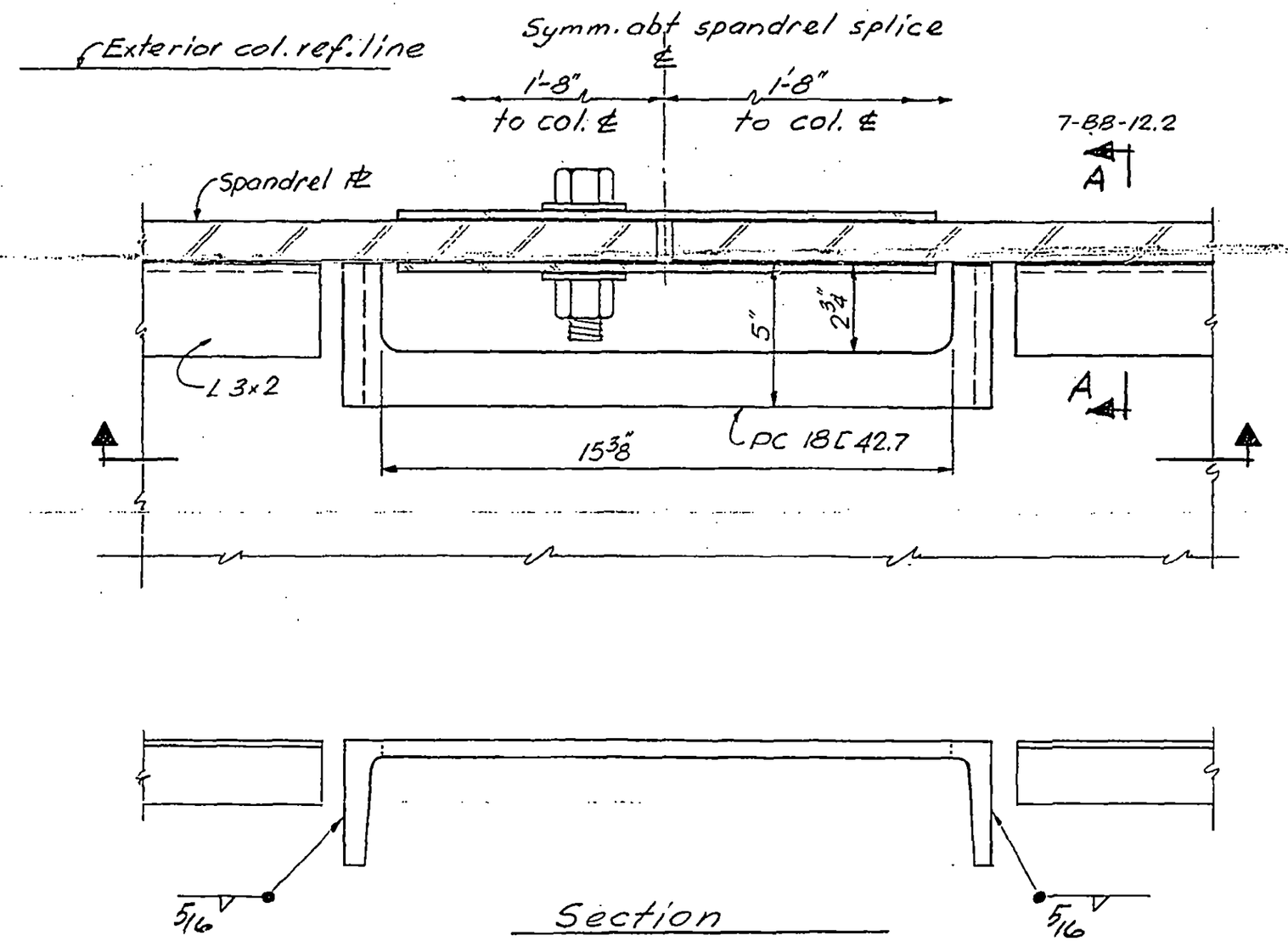

Section

LICENSED PROFESSIONAL ENGINEER
LESLIE E. ROBERTSON
No. 34360
UNIVERSITY OF THE STATE OF NEW YORK

DESIGNED

DRAWN

REVIEWED

7-B8-12.5

SKILLING, HELLE, CHRISTIANSEN, ROBERTSON — Structural & Civil Engineers

PROJECT: THE WORLD TRADE CENTER | TITLE: FLOOR TRUSS DETAIL 13.1 | DATE: 3-19-69

REVISIONS

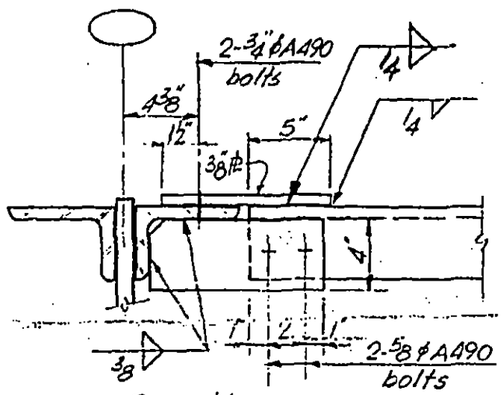

Section a-a

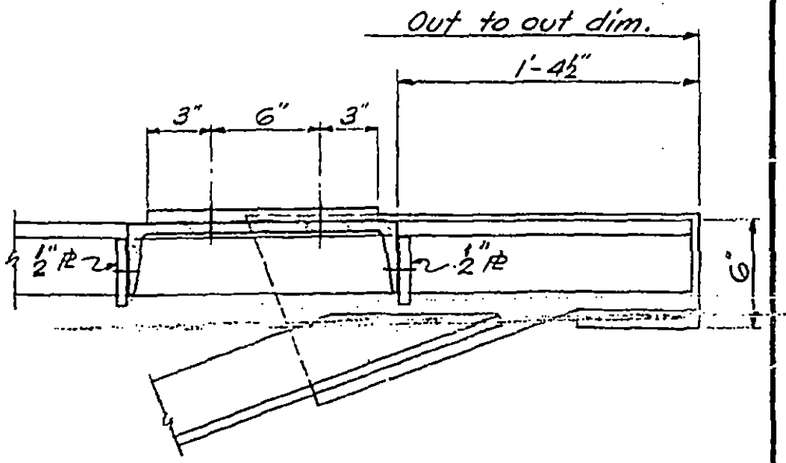

Section b-b

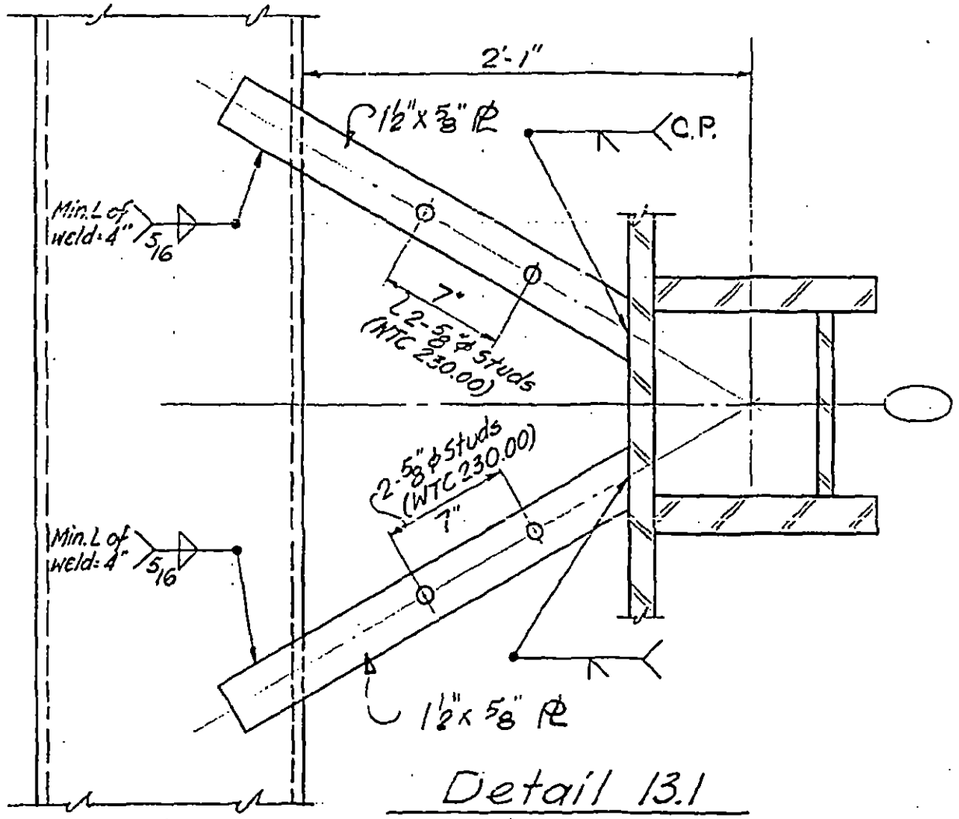

Detail 13.1

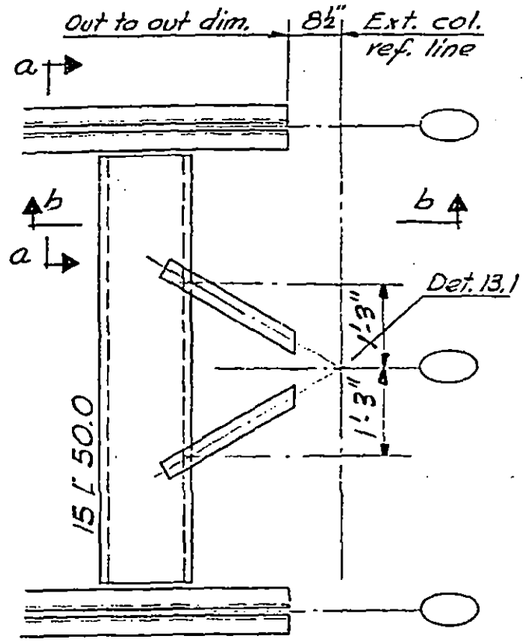

Plan

7-B8-13.1

LICENSED PROFESSIONAL ENGINEER — LESLIE E. ROBERTSON — No. 34360 — UNIVERSITY OF THE STATE OF NEW YORK

DESIGNED K. Hwang
DRAWN J. Gricius
REVIEWED W. Brewer

R.

SKILLING, HELLE, CHRISTIANSEN, ROBERTSON — Structural & Civil Engineers

PROJECT: THE WORLD TRADE CENTER | TITLE: FLOOR TRUSS DETAIL 13.2 , 13.4 | DATE: 3-19-69

REVISIONS

7-14-69

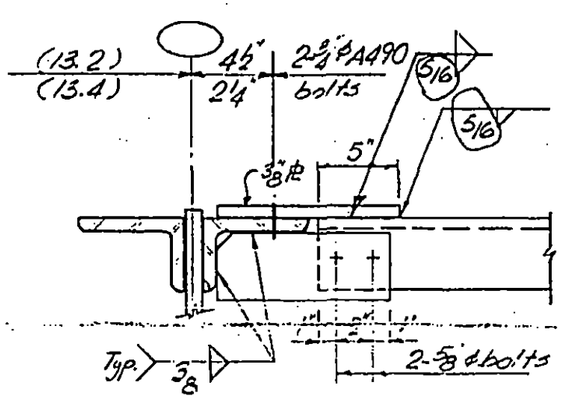

Section c-c

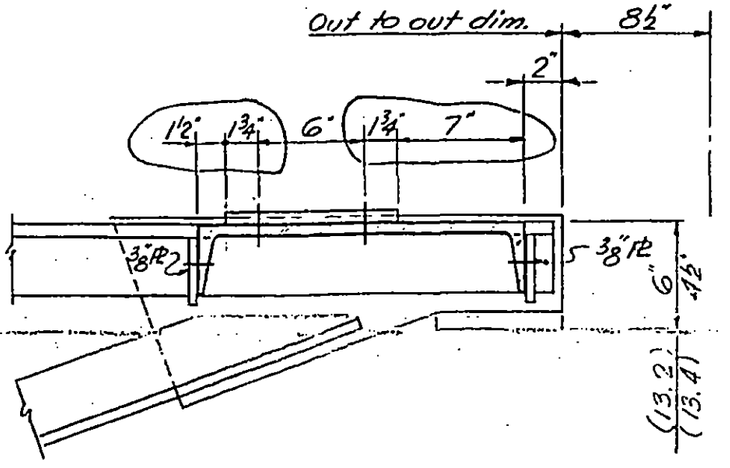

Section d-d

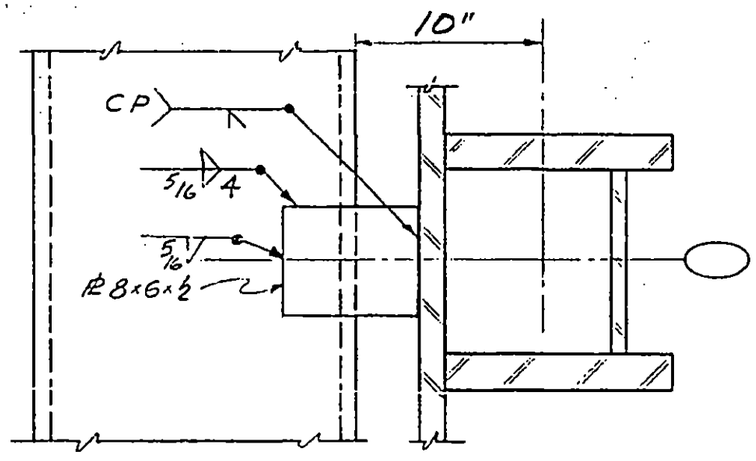

Detail 13.2

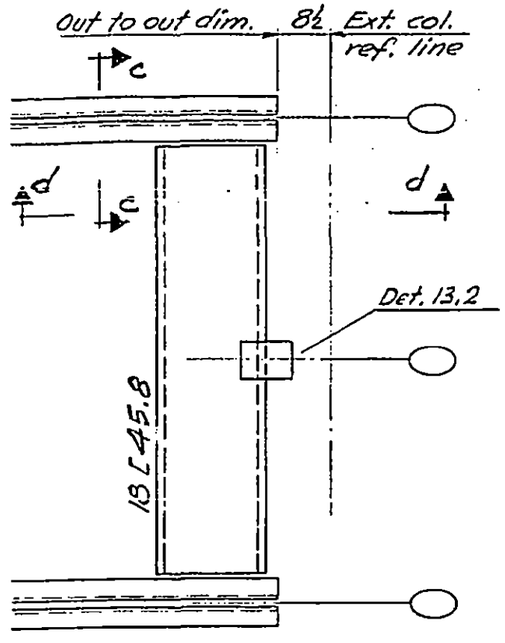

Plan

7-B8-13.2

LICENSED PROFESSIONAL ENGINEER
LESLIE E. ROBERTSON
No. 34360
UNIVERSITY OF THE STATE OF NEW YORK

DESIGNED K. Hwang
DRAWN J. Gricius
REVIEWED W. Brewer R.

SKILLING, HELLE, CHRISTIANSEN, ROBERTSON Structural & Civil Engineers

PROJECT THE WORLD TRADE CENTER | TITLE FLOOR TRUSS DETAIL 13.3 | DATE 3-19-69

REVISIONS

7-14-69

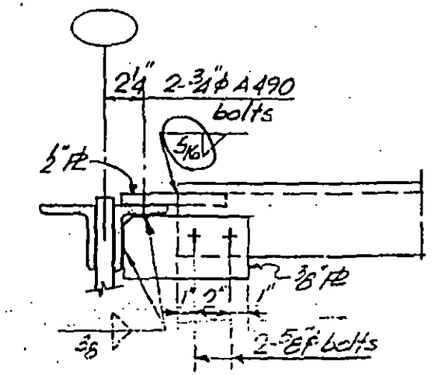

Section e-e

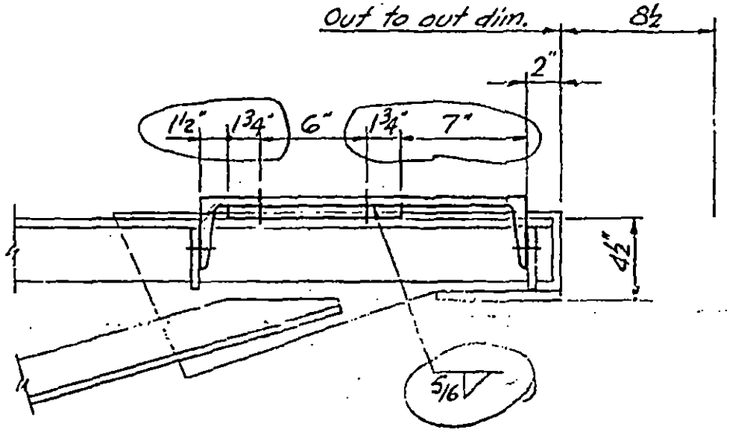

Section f-f

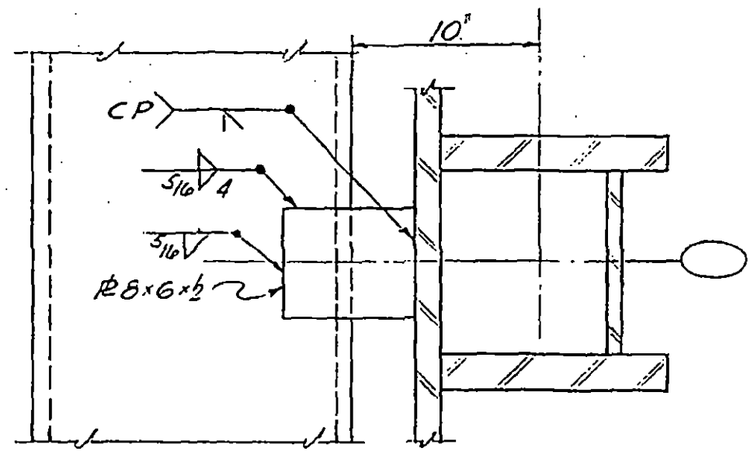

Detail 13.3

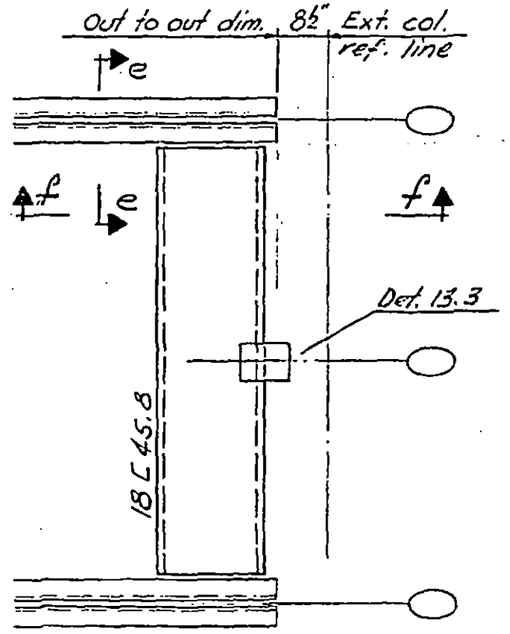

Plan

LICENSED PROFESSIONAL ENGINEER LESLIE E. ROBERTSON No. 34360 UNIVERSITY OF THE STATE OF NEW YORK

DESIGNED K. Browning

DRAWN J. Gricius

REVIEWED W. Brewer R.

7-B8-13.3

SKILLING, HELLE, CHRISTIANSEN, ROBERTSON — Structural & Civil Engineers

PROJECT: THE WORLD TRADE CENTER | TITLE: FLOOR TRUSS DETAIL 14.1 | DATE: 3-19-69

REVISIONS

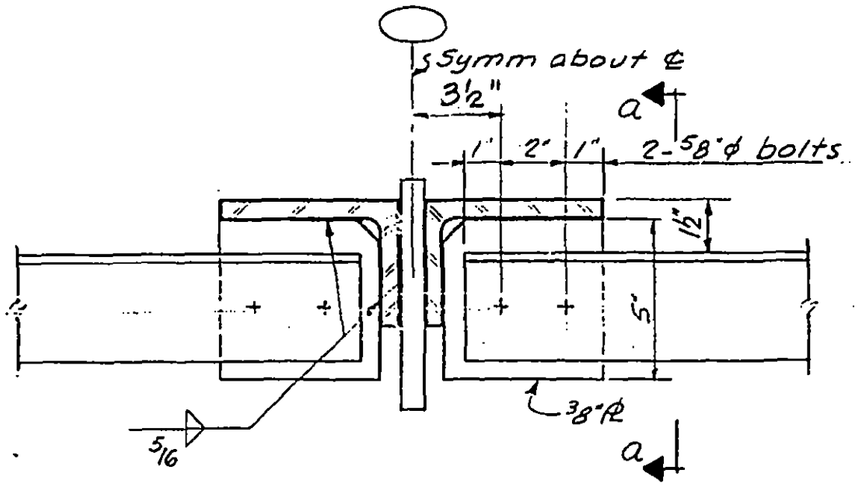

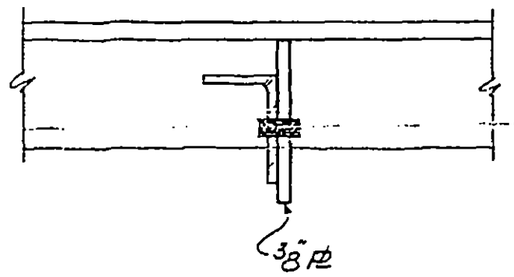

Section a-a

LICENSED PROFESSIONAL ENGINEER
LESLIE E. ROBERTSON
No. 34360
UNIVERSITY OF THE STATE OF NEW YORK

DESIGNED K. Hwang
DRAWN J. Gricius
REVIEWED W. Brewer

7-B8-14.1

SKILLING, HELLE, CHRISTIANSEN, ROBERTSON — Structural & Civil Engineers

PROJECT: THE WORLD TRADE CENTER | TITLE: FLOOR TRUSS DETAIL 15.1 | DATE: 3-19-69

REVISIONS

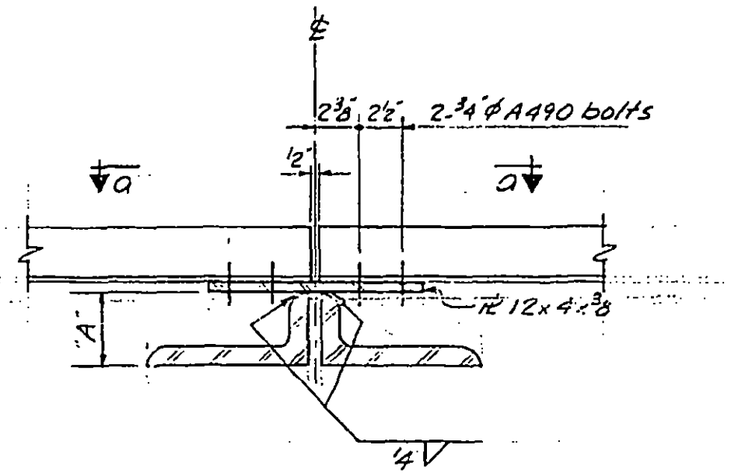

DETAIL 15.1 For A = 4" Min.

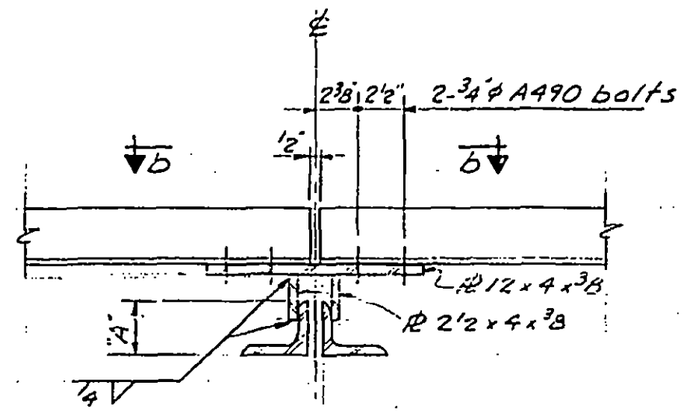

DETAIL 15.1 For A < 4"

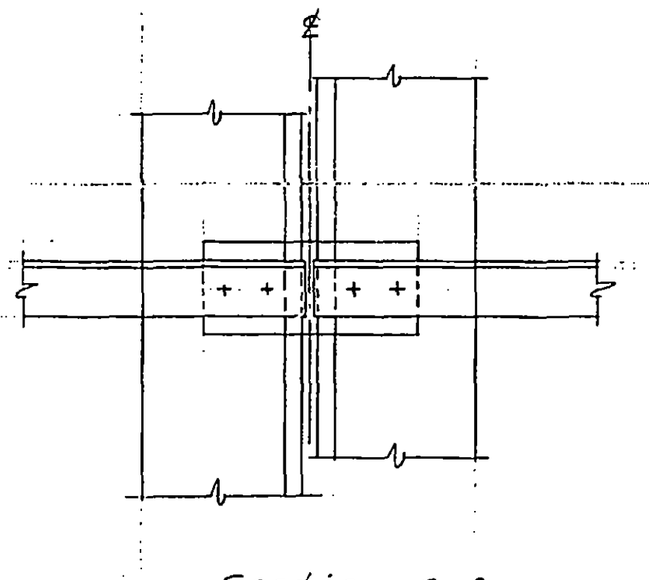

Section a-a

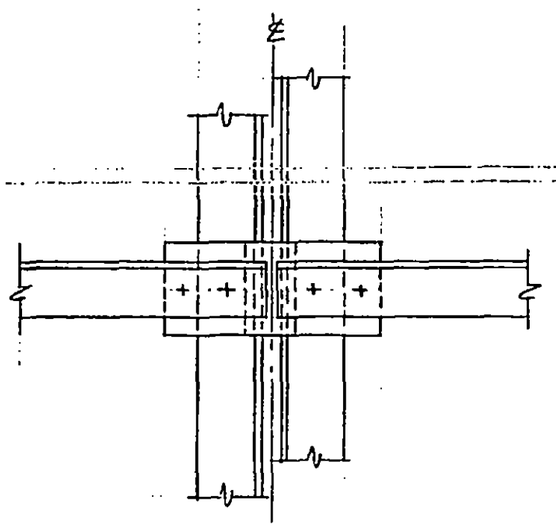

Section b-b

LICENSED PROFESSIONAL ENGINEER
LESLIE E. ROBERTSON
No. 34360
UNIVERSITY OF THE STATE OF NEW YORK

DESIGNED K. Hwang
DRAWN A.L. FRANQUI
REVIEWED W Brewer

7-B8-15.1

SKILLING, HELLE, CHRISTIANSEN, ROBERTSON — Structural & Civil Engineers

PROJECT THE WORLD TRADE CENTER | TITLE FLOOR TRUSS DETAIL 15.2 | DATE 3-19-69

REVISIONS

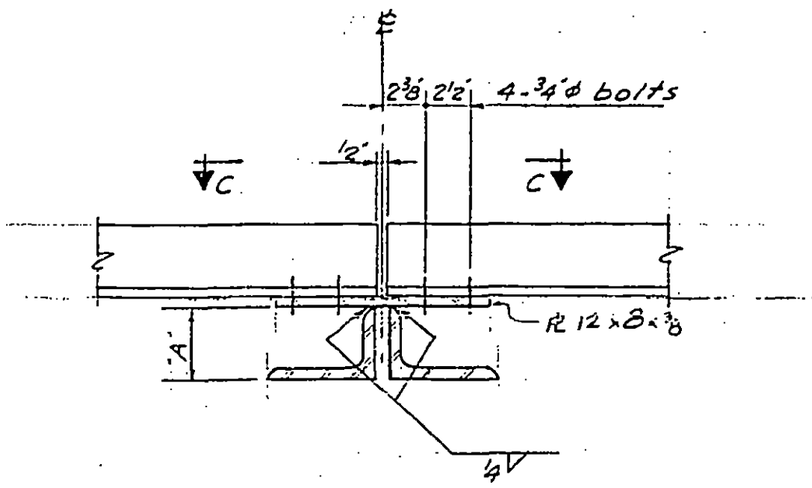

DETAIL 15.2 For A = 4" Min.

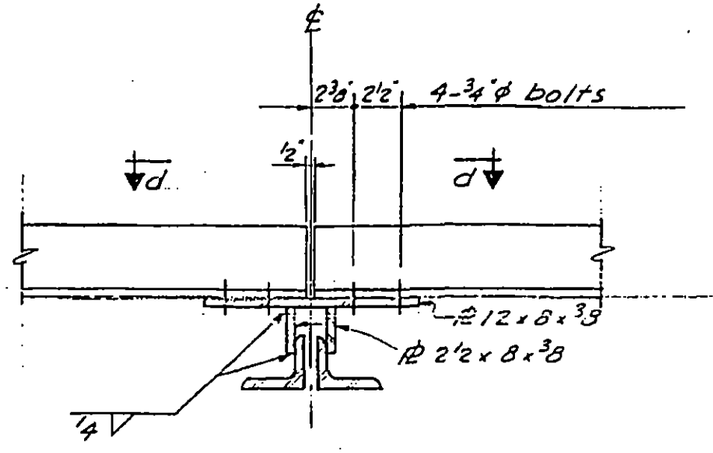

DETAIL 15.2 For A < 4"

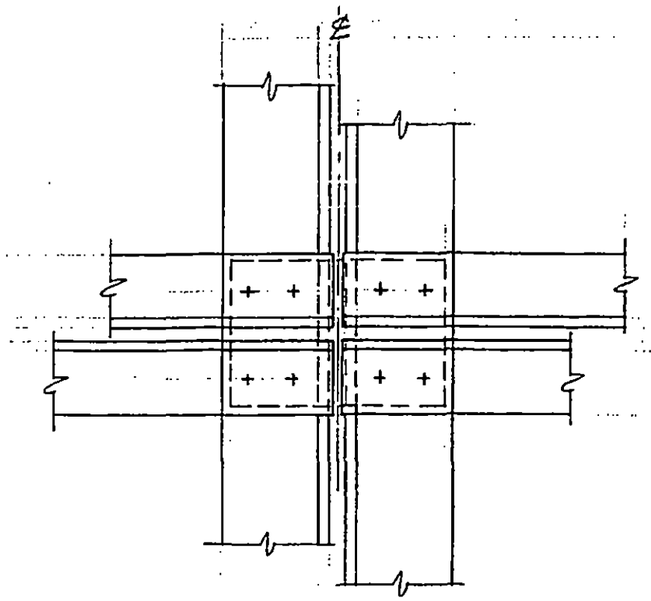

Section C-C

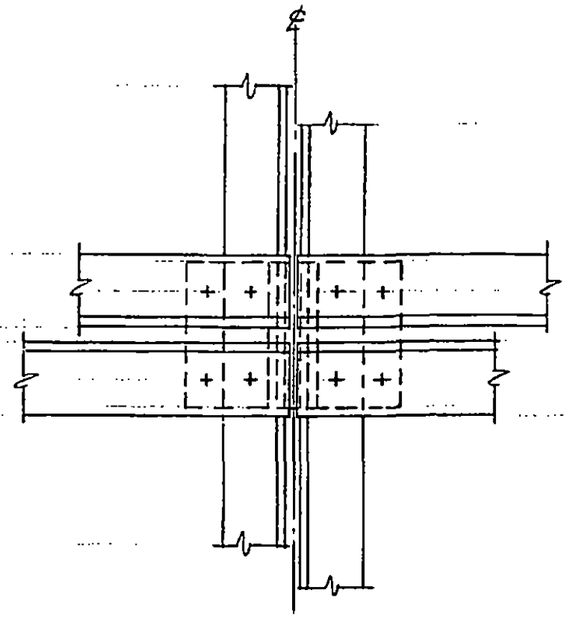

Section d-d

LICENSED PROFESSIONAL ENGINEER
LESLIE E. ROBERTSON
No. 34360
UNIVERSITY OF THE STATE OF NEW YORK

DESIGNED K. Hwang
DRAWN A.L. FRANQUI
REVIEWED W. Brewer

T-B8-15.2

SKILLING, HELLE, CHRISTIANSEN, ROBERTSON — Structural & Civil Engineers

PROJECT	TITLE	DATE
THE WORLD TRADE CENTER	FLOOR TRUSS DETAIL 16.1 – 16.6	3-19-69

REVISIONS

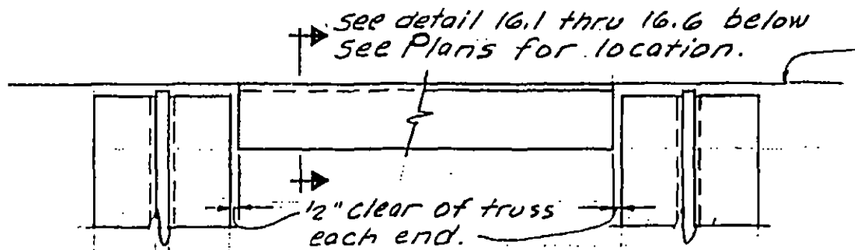

TYPICAL DETAIL 16

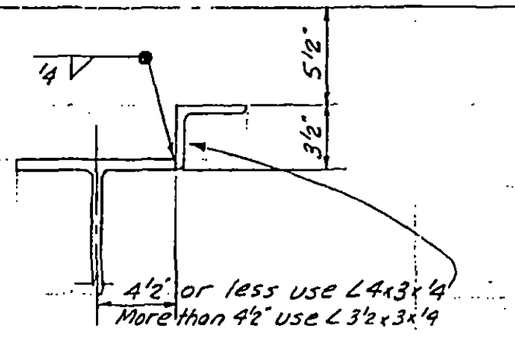

Detail 16.1

Typical East & West core perimeter floors 10, 11 & 12

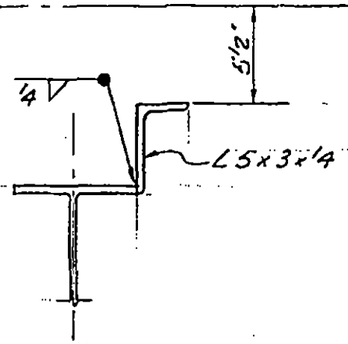

Detail 16.2

Typical South core perimeter floors 10, 11 & 12

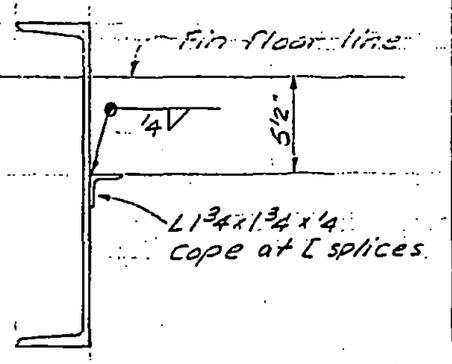

Detail 16.3

Typical East & West core perimeter floor 13

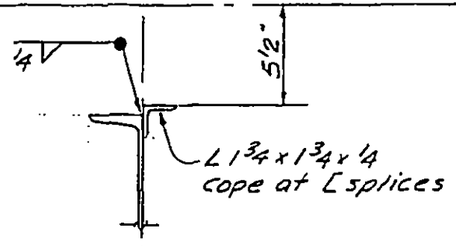

Detail 16.4

Typical North & South core perimeter floor 13

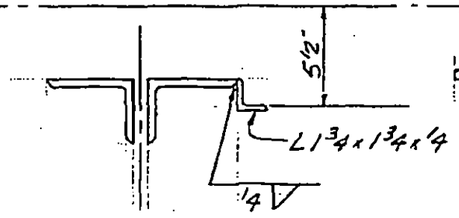

Detail 16.5

Typical trusses 29T6, T9 & T24

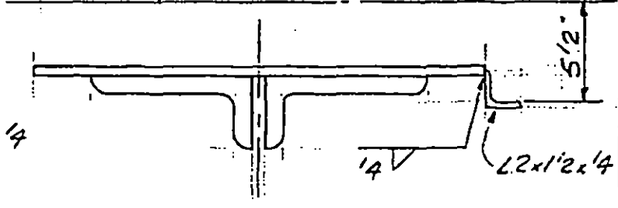

Detail 16.6

Typical trusses 29T5

LICENSED PROFESSIONAL ENGINEER
LESLIE E. ROBERTSON
No. 34360
UNIVERSITY OF THE STATE OF NEW YORK

DESIGNED

DRAWN A.L. FRANQUI

REVIEWED W. Brewer R.

7-B8-16.1

ITC1-1060-LERA